PFAFF

3119

Instruction manual

This instruction manual applies to machines from the following serial numbers onwards:

873444 →

296-12-18 462/002
Betriebsanleitung engl. 04.01

This instruction manual applies to all versions and subclasses listed under "Specifications".

Reprinting, copying or translation of PFAFF instruction manuals, whether in whole or in part, is not permitted without our prior permission and not without written indication of the source.

G.M. PFAFF KAISERSLAUTERN
INDUSTRIEMASCHINEN AG

Postfach 3020
D-67653 Kaiserslautern
Königstr. 154
D-67655 Kaiserslautern

VTD Verlag
77901 Lahr

Contents ..... Chapter – Page

1	Safety	1 - 1
1.01	Regulations	1 - 1
1.02	General notes on safety	1 - 1
1.03	Safety symbols	1 - 2
1.04	Important notes for the user	1 - 2
1.05	Notes for operating and technical staff	1 - 3
1.05.01	Operating staff	1 - 3
1.05.02	Technical staff	1 - 3
1.06	Danger warnings	1 - 4
2	Proper Use	2 - 1
3	Specifications	3 - 1
3.01	General information	3 - 1
3.02	Stitch formations of the various sub-classes	3 - 2
4	Disposal of Machine	4 - 1
5	Transportation, packing and storage	5 - 1
5.01	Transportation to customer's premises	5 - 1
5.02	Transportation inside customer's premises	5 - 1
5.03	Disposal of packing materials	5 - 1
5.04	Storage	5 - 1
6	Explanation of symbols	6 - 1
7	Controls	7 - 1
7.01	On/off switch	7 - 1
7.02	Pedal	7 - 1
7.03	Preventing knife engagement	7 - 2
7.04	Control panel	7 - 3
8	Installation and commissioning	8 - 1
8.01	Installation	8 - 1
8.01.01	Adjusting the table height	8 - 1
8.01.02	Installation variants	8 - 2
8.01.03	Connecting the plug-type connections	8 - 3
8.01.04	Fitting the reel stand	8 - 4
8.02	Commissioning	8 - 4
8.03	Switching the machine on / off	8 - 4
8.04	Setting up the machine control unit	8 - 5
8.04.01	Establishing the sub-class	8 - 5
8.04.02	Setting parameter "202"	8 - 6
9	Setting up	9 - 1
9.01	Inserting the needle	9 - 1
9.02	Winding the bobbin thread / adjusting the preliminary thread tension	9 - 2
9.03	Threading the bobbin case / adjusting the thread tension	9 - 3
9.04	Changing the bobbin	9 - 4
9.05	Threading the needle thread	9 - 5

Contents ..... Chapter – Page

9.06	Selecting the buttonhole type	9 - 6
9.07	Adjusting the needle thread tension	9 - 7
9.08	Adjusting the work clamp pressure	9 - 8
10	Sewing	10 - 1
10.01	Operating panel with speed display	10 - 1
10.02	Operating panel with display of the buttonhole model	10 - 2
10.03	Selecting a buttonhole	10 - 3
10.04	Selecting the cut length of the buttonhole	10 - 4
11	Input	11 - 1
11.01	Summary of the function groups and parameters	11 - 1
11.02	Selecting the function group and altering the parameters	11 - 2
11.03	Entering / altering the access code	11 - 3
11.04	Allocating access rights	11 - 4
11.05	Variable programs	11 - 5
11.05.01	Copying programs	11 - 5
11.05.02	Creating/modifying variable programs	11 - 6
11.05.03	Buttonhole models	11 - 7
11.05.04	Table for recording personal variable programs	11 - 10
11.06	Special programs	11 - 12
11.07	PC-programs (optional)	11 - 12
11.07.01	SAM (Sewing Application Manager)	11 - 12
11.07.02	OSCA (On-/Offline Sewing Creativity Arrangement)	11 - 12
11.07.03	Data transfer between PC (SAM) and PFAFF 3119	11 - 13
12	Care and maintenance	12 - 1
12.01	Cleaning the machine	12 - 1
12.02	Cleaning the hook compartment	12 - 2
12.03	Cleaning the air filter of air filter / lubricator	12 - 3
12.04	Checking / adjusting the air pressure	12 - 3
12.05	Oil level for the needle drive unit	12 - 4
12.06	Oil level for the hook	12 - 4
13	Adjustment	13 - 1
13.01	Notes on adjusting	13 - 1
13.02	Tools, gauges and other accessories	13 - 1
13.03	Abbreviations	13 - 1
13.04	Toothed belts of hook drive unit	13 - 2
13.05	Drive rods of bobbin thread trimming device	13 - 3
13.06	Switch for sewing start	13 - 4
13.07	Basic position of feed drive unit	13 - 5
13.08	Preliminary adjustment of the work clamp	13 - 6
13.09	Toothed belts of the main drive unit	13 - 7
13.10	Preliminary adjustment of the needle height	13 - 8
13.11	Position of the needle plate in relation to the needle	13 - 9

Contents ..... Chapter – Page

13.12	Sensor board of needle drive (in dismantled state)	13 - 10
13.13	Basic setting of the needle drive unit	13 - 12
13.14	Basic position of the work clamp (lengthwise to the arm)	13 - 13
13.15	Basic position of the work clamp (crosswise to the arm)	13 - 14
13.16	Upper take-up lever position (reference position)	13 - 15
13.17	Lifting elbow on work clamp	13 - 16
13.18	Work clamp stroke	13 - 17
13.19	Lifting cylinder of the work clamp	13 - 18
13.20	Cutting pressure of the knife unit (in dismantled state)	13 - 19
13.21	Position of the knife bracket and lower knife stop	13 - 20
13.22	Upper knife stop	13 - 22
13.23	Knife control switch	13 - 23
13.24	Knife motion	13 - 24
13.25	Distance of knife to the needle bar	13 - 25
13.26	Changing the knife / knife height	13 - 26
13.27	Functional test	13 - 27
13.28	Needle thread cutter (vertical and horizontal adjustment)	13 - 28
13.29	Cam guide unit	13 - 29
13.30	Needle thread cutter stroke	13 - 30
13.31	Needle thread cutter switch	13 - 31
13.32	Needle thread cutter release	13 - 32
13.33	Catch	13 - 33
13.34	Swing out motion of the needle thread cutter	13 - 34
13.35	Needle bar rise and hook-to-needle clearance	13 - 35
13.36	Needle bar height and needle guard	13 - 37
13.37	Bobbin case holder	13 - 38
13.38	Hook lubrication	13 - 39
13.39	Knife position	13 - 40
13.40	Knife guard	13 - 41
13.41	Needle thread tension release	13 - 42
13.42	Needle thread puller	13 - 43
13.43	Side thread tension and slack thread regulator	13 - 44
13.44	Bobbin winder	13 - 45
13.45	Retainer position (only for 3119-2/63)	13 - 46
13.46	Carrying out a cold start	13 - 46
13.47	Parameter settings	13 - 47
13.47.01	Selecting and altering parameters	13 - 47
13.47.02	List of parameters	13 - 48
13.48	Error messages	13 - 53
14.01	Wearing parts	14 - 1
15.01	Circuit diagrams	15 - 1

1 Safety

1.01 Regulations

This machine is constructed in accordance with the European regulations indicated in the conformity and manufacturer's declarations.
In addition to this instruction manual, please also observe all generally accepted, statutory and other legal requirements, including those of the user's country, and the applicable pollution control regulations!
The valid regulations of the regional social insurance society for occupational accidents or other supervisory authorities are to be strictly adhered to!

1.02 General notes on safety

- The machine must only be operated by adequately trained operators and only when the instruction manual has been fully read and understood!
- All notices on safety and the instruction manual of the motor manufacturer are to be read before the machine is put into operation!
- All notes on the machine concerning danger and safety must be observed!
- The machine must be used for the purpose for which it is intended and must not be operated without its safety devices; all regulations relevant to safety must be adhered to.
- When part sets are changed (e.g. needle, presser foot, needle plate, feed dog or bob-bin), during threading, when the workplace is left unattended and during maintenance work, the machine must be isolated from the power supply by turning off the on/off switch or removing the plug from the mains!
- Daily maintenance work must only be carried out by appropriately trained persons!
- Repairs and special maintenance work must only be carried out by qualified technical staff or persons with appropriate training!
- During maintenance or repairs on the pneumatic system the machine must be isolated from the compressed air supply! The only exception to this is when adjustments or function checks are carried out by appropriately trained technical staff!
- Work on the electrical equipment must only be carried out by technical staff who are qualified to do so!
- Work on parts or equipment connected to the power supply is not permitted! The only exceptions to this are specified in regulations EN 50110.
- Conversion or modification of the machine must only be carried out under observation of all relevant safety regulations!
- Only spare parts which have been approved by us are to be used for repairs! We draw special attention to the fact that spare parts and accessories not supplied by us have not been subjected to testing nor approval by us. Fitting and/or use of any such parts may cause negative changes to the design characteristics of the machine. We shall not accept any liability for damage caused by the use of non-original parts.

1.03 Safety symbols

Danger!
Special points to observe.

Danger of injury to operating or technical staff!

Electric voltage!
Danger to operating or technical staff!

Caution

Do not operate without finger guard and safety devices. Before threading, changing bobbin and needle, cleaning etc. switch off main switch.

1.04 Important notes for the user

- This instruction manual belongs to the equipment of the machine and must be available to the operating staff at all times.
  This instruction manual must be read before the machine is operated for the first time.
- Both operating and technical staff must be instructed on the safety devices of the machine and on safe working methods.
- It is the duty of the user to operate the machine in perfect running order only.
- The user must ensure that none of the safety devices are removed nor put out of working order.
- The user must ensure that only authorized persons operate and work on the machine.

For further information please refer to your PFAFF agency.

1.05 Notes for operating and technical staff

1.05.01 Operating staff

Operating staff are the persons responsible for setting up, operating and cleaning the machine and for removing any disturbances in the sewing area.

The operating staff are obliged to observe the following points, and must:

- always observe the notes on safety in this instruction manual!
- avoid using any working methods which adversely effect the safety of the machine!
- avoid wearing loose-fitting clothing or jewelry such as necklaces or rings!
- also ensure that only authorized persons are allowed near the danger area of the machine!
- immediately report to the user any changes to the machine that may affect its safety!

1.05.02 Technical staff

Technical staff are persons who have been trained in electrical engineering, electronics, pneumatics and mechanical engineering. They are responsible for lubricating, servicing, repairing and adjusting the machine.

The technical staff are obliged to observe the following points, and must:

- always observe the notes on safety in this instruction manual!
- switch off the on/off switch before carrying out adjustment and repair work and ensure it cannot be switched on again unintentionally!
- never work on parts or equipment still connected to the power supply! Exceptions to this are only permissible according to regulations EN 50110;
- isolate the machine from the compressed air supply when carrying out maintenance or repair work on pneumatic equipment!
  Exceptions to this are only permissible for function checks;
- replace all safety covers after carrying out maintenance or repair work!

1.06 Danger warnings

A working area of 1 m must be kept free both in front of and behind the machine, so that easy access is possible at all times.

Never put your hands in the sewing area during sewing!
Danger of injury by the needle!

During maintenance and adjustment work the knife must be secured with locking device 1. Danger of injury from the knife!

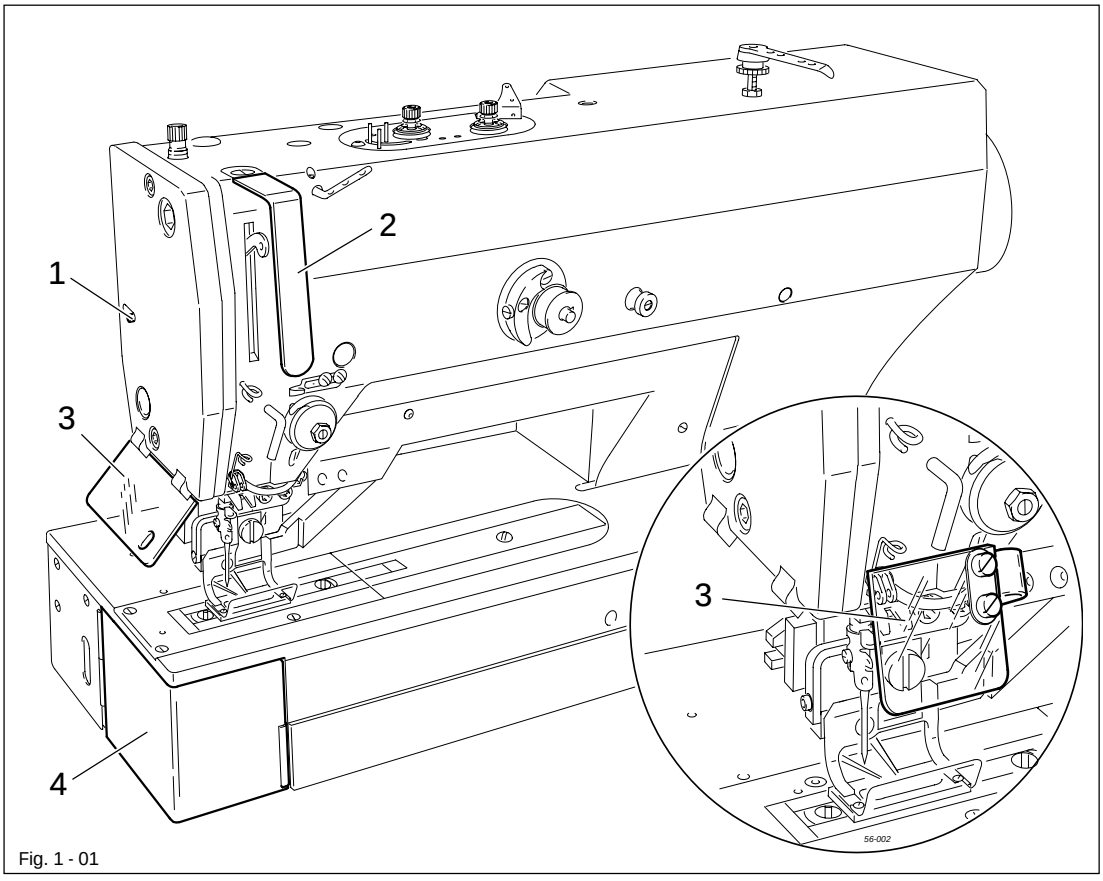

Fig. 1 - 01

Do not operate the machine without the take-up lever guard 2!
Danger of injury from the movement of the take-up lever.

Do not operate the machine without eye shield 3!
Danger of injury from needle splinters! The type of eye shield is dependent on the way the machine is installed.

Only operate the machine with cover 4 closed.
Danger of injury from the hook!

2 Proper use

The PFAFF 3119 is used for sewing purl or flat buttonholes with two flat or raised square bars on linen and clothing.

Any use of these machines which is not approved by the manufacturer shall be considered as improper use! The manufacturer shall not be liable for any damage arising out of improper use! Proper use shall also be considered to include compliance with the operation, adjustment, service and repair measures specified by the manufacturer!

3 Specifications ▲

3.01 General information

Subclasses:
-1/51, -1/52, -2/51: ..... for sewing fine materials
-2/53, -3/51, -4/51: ..... for sewing medium-heavy materials
-2/63: ..... for sewing delicate knitted fabrics

Max. sewing speed: ..... 4200 min^{-1}
Stitch type: 304
Needle bar stroke: ..... 34.5 mm
Max. thickness of workpiece: ..... max. 4 mm
Max. work clamp clearance: ..... max. 12.5 mm
Fabric clearance (crosswise to sewing arm): ..... 235 mm
Fabric clearance (lengthwise to sewing arm): ..... 30 mm
Stitch formation: ..... buttonhole, max. 48 mm x 5.5 mm
Length of buttonhole cut: ..... 6.4 mm – 38.1 mm
Zig-zag stitch: ..... max. 5.5 mm
Number of stitches: ..... freely programmable
Feed type: ..... intermittent

Power supply: ..... 190 – 240 V –20%, +10%, 50/60 Hz, single phase
Power consumption: ..... max. 0.6 KVA
Input power rating: ..... 0.7 kVA
Fuse protection: ..... 1 x 16A, inert
Software status: ..... see parameter "104"

Working air pressure: ..... 6 bar
Air consumption ..... ~1.2 l / work cycle

Noise emission level at workplace with a sewing cycle of 4 sec.
On and 2 sec. Off: ..... $L_{pA} \leq 81$ dB(A)
(Noise measurement in accordance with DIN 45 635-48-B-1)

Sewing head dimensions:
Length: ..... approx. 514 mm
Width: ..... approx. 200 mm
Height: ..... approx. 450 mm
Weight of sewing head: ..... approx. 65 kg

Dimensions of base:
Length: ..... approx. 1060 mm
Width: ..... approx. 600 mm
Height ..... approx. 820 mm
Weight of base incl. control box: ..... approx. 45 kg

Needle system: 438
Needle size for fine materials: ..... 60 - 70
Needle size for medium-weight materials: ..... 80 - 100

▲ Subject to alteration

3.02 Stitch formation of the various sub-classes

Sub-class (Parameter 202)	Subclass for cutting thru 3119-1/51 3119-1/52 Subclass for block cutting	3119-2/51	3119-2/53 3119-2/63	3119-3/51	3119-4/51
Cut-out size in work clamp [mm]	*presser foot opening size* 30.0 x 5.6	*presser foot opening size* 40.0 x 5.6	*presser foot opening size* 40.0 x 6.7	*presser foot opening size* 46.0 x 6.7	*presser foot opening size* 55.0 x 7.0
Buttonhole size [mm]	*length X width* 24.0 x 4.5	*length X width* 34.0 x 4.5	*length X width* 34.0 x 5.5	*length X width* 40.0 x 5.5	*length X width* 48.0 x 5.5
Length of buttonhole cut [mm]	*Cut opening* 6.4 9.5 11.0 12.7 14.0 16.0 17.5	*Cut opening* 6.4 9.5 11.0 12.7 14.0 16.0 17.5 19.0 22.2 25.4 *Cut opening*	*Cut opening* 6.4 9.5 11.0 12.7 14.0 16.0 17.5 19.0 22.2 25.4 *Cut opening*	*Cut opening* 6.4 9.5 11.0 12.7 14.0 16.0 17.5 19.0 22.2 25.4 28.6 31.7*	*Cut opening* 6.4 9.5 11.0 12.7 14.0 16.0 17.5 19.0 22.2 25.4 28.6 31.7* 33.7 35.0 36.5 38.1

* When the multiple cutting operation is activated (parameter 207 on II), for a cutting length from 31.7 mm, the length of the knife must be at least 16.0 mm.

Each time parts are changed, the control unit must be adapted to the sub-class, see **Chapter 8.02 Setting the control unit**. An incorrect setting can cause the knife or needle to strike the work clamp.

4 Disposal of Machine

- Proper disposal of the machine is the responsibility of the customer.
- The materials used for the machine are steel, aluminium, brass and various plastic materials.
  The electrical equipment comprises plastic materials and copper.
- The machine is to be disposed of according to the locally valid pollution control regulations; if necessary, a specialist ist to be commissioned.

Care must be taken that parts soiled with lubricants are disposed of separately according to the locally valid pollution control regulations!

5 Transportation, packing and storage

5.01 Transportation to customer's premises

All machines are delivered completely packed.

5.02 Transportation inside the customer's premises

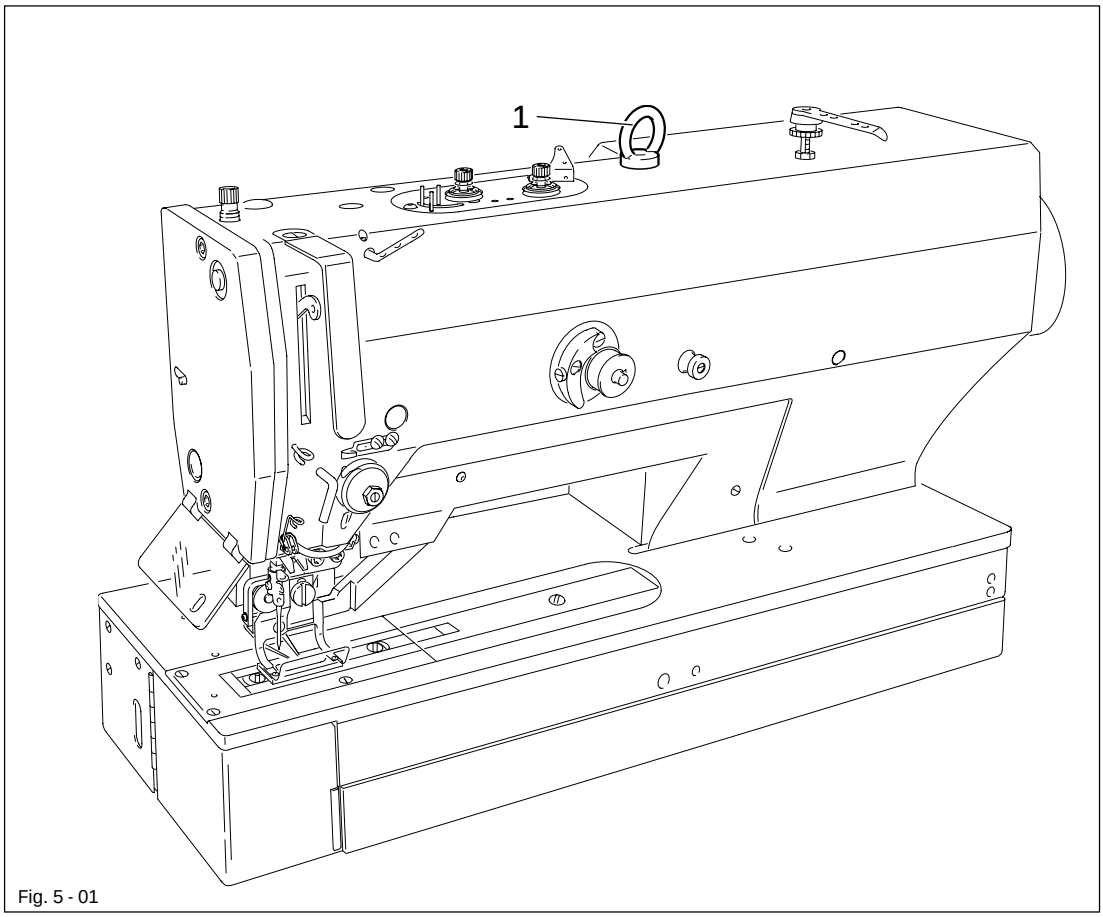

Fig. 5 - 01

The manufacturer cannot be made liable for transportation inside the customer's premises, nor to other operating locations. Care must be taken that the machine is transported in an upright position. To lift the machine with a suitable lifting appliance, lifting ring 1 delivered with the machine can be screwed into the threaded hole on the machine.

5.03 Disposal of packing materials

The packing materials of these machines consist of paper, cardboard and VCE-fibre.
Proper disposal of the packing material is the responsibility of the customer.

5.04 Storage

If the machine is not in use, it can be stored as it is for a period of up to six months, but it should be protected against dust and moisture.
If the machine is stored for longer periods, the individual parts, especially the surfaces of moving parts, must be protected against corrosion, e.g. by a film of oil.

6 Explanation of symbols

In this instruction manual, work to be carried out or important information is accentuated by symbols. These symbols have the following meanings:

Note, information

Cleaning, care

Lubrication

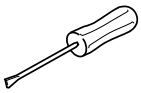

Maintenance, repairs, adjustment, service work
(only to be carried out by technical staff)

7 Controls

7.01 On / off switch

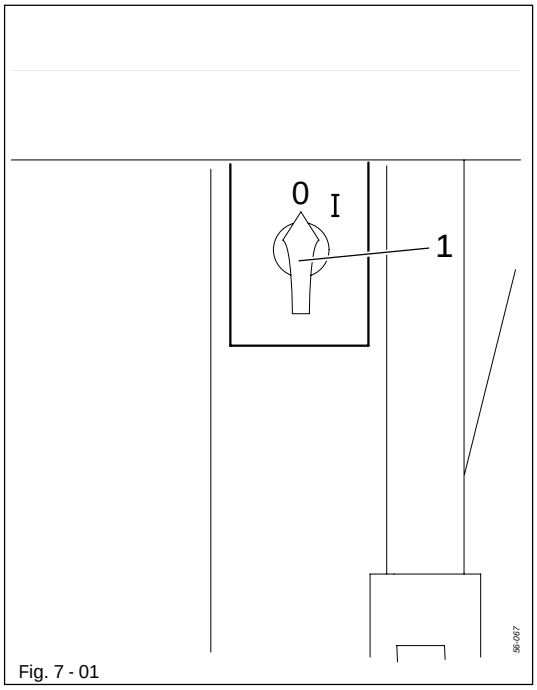

Fig. 7 - 01

- The machine is switched on or off by turning the on / off switch 1.

7.02 Pedal

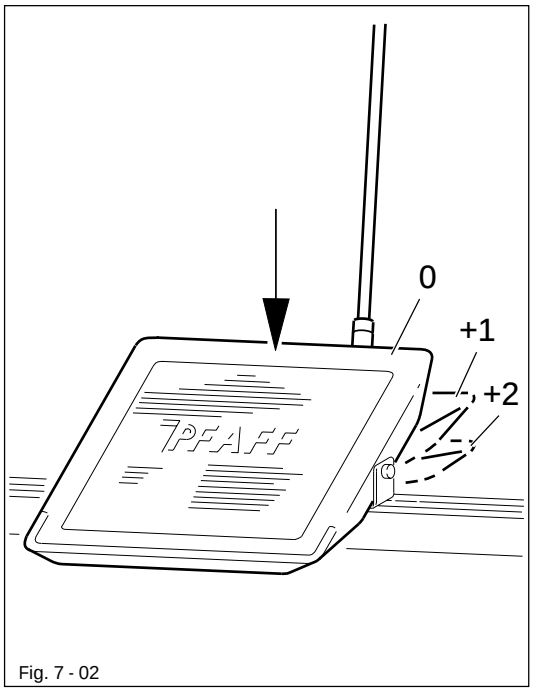

Fig. 7 - 02

0 = Neutral position

+1 = Work clamp lowered

+2 = Sewing

7.03 Preventing knife engagement

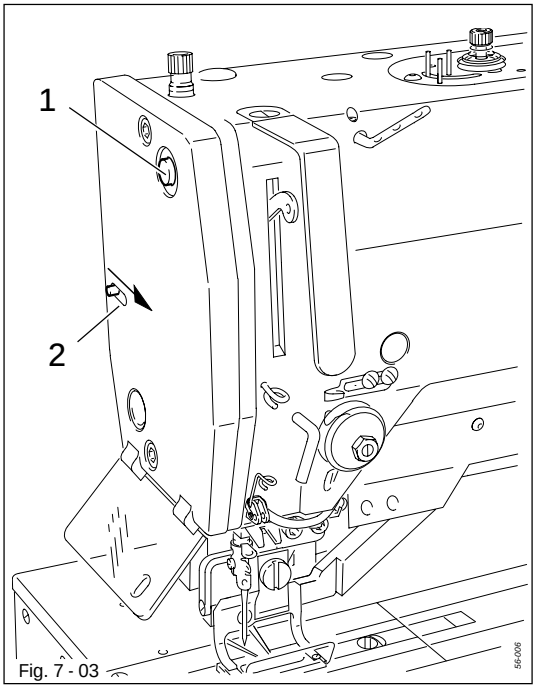

Fig. 7 - 03

- By operating push button 1, knife engagement at the end of the current sewing cycle is prevented.
- By moving lever 2 in the direction of the arrow, the knife is mechanically locked. This prevents knife engagement during setting-up, maintenance and adjustment work.

7.04 Control panel

The keys on control panel **1** are used for selecting machine functions for setting-up purposes, for sewing operations and for entering parameters.

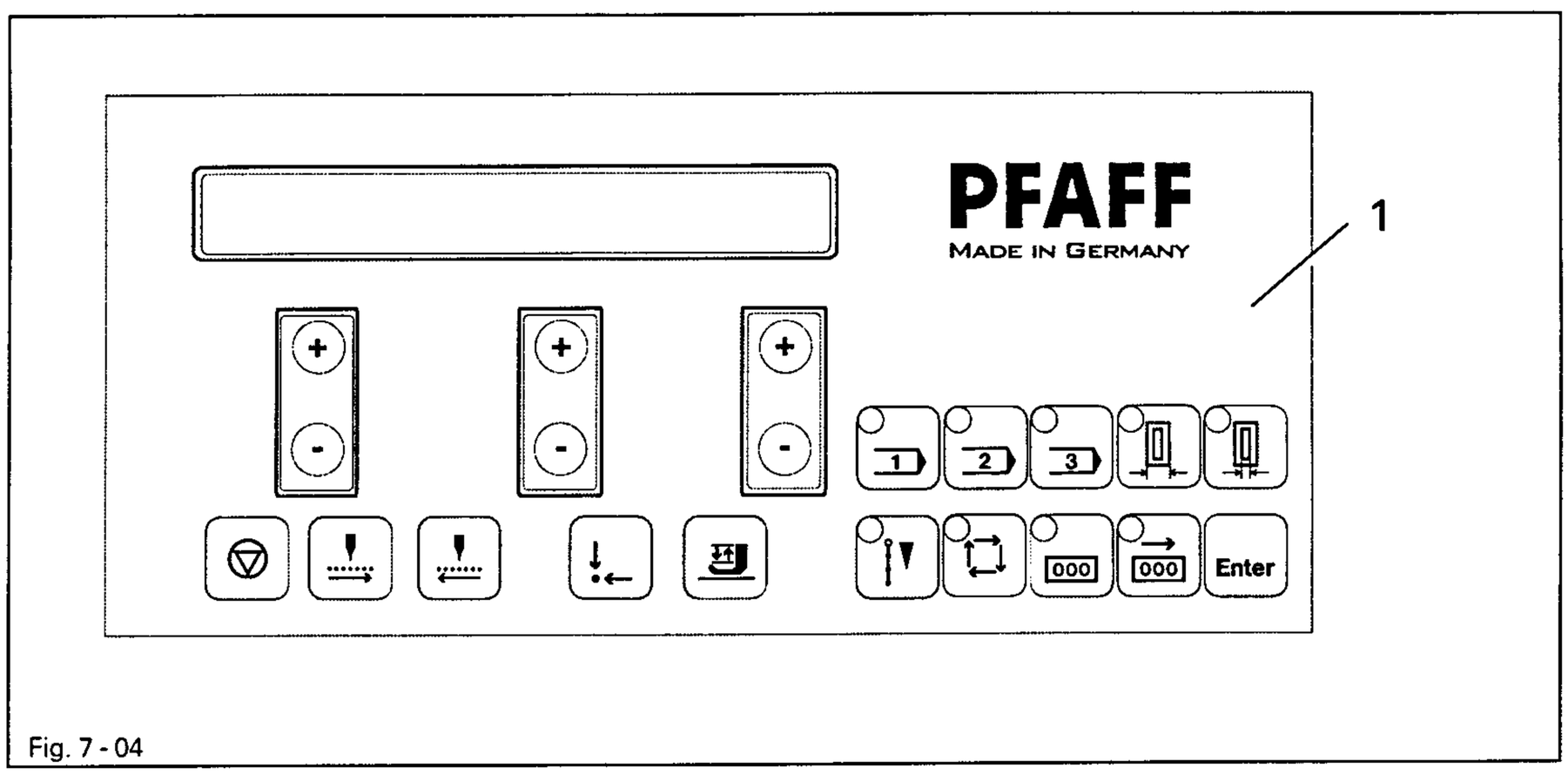

Fig. 7 - 04

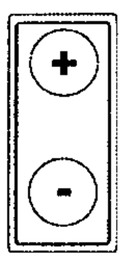

Plus / minus key

- The values showed on the display can be increased or reduced on the respective key using these keys.

Stop

- When operated during a sewing cycle, the machine is stopped.
- If operated outside a sewing cycle, the winding operation is started/stopped.
- When entering the code number this key corresponds to the figure 0.

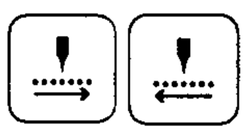

Step-by-step forwards / step-by-step backwards

- Step-by-step movement through the entire sewing cycle forwards or backwards.

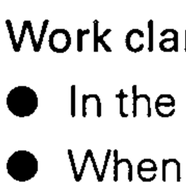

When moving step-by-step through the sewing cycle, all cutting procedures will be carried out! Danger of injury if the knife engages!

Basic position

- In the operational mode Sewing the machine moves to the basic position.
- In the operational mode Input the parameter input is interrupted (without the values being saved) and the function group level of the parameter list is selected (100, 200, ..., 800).

Work clamp raised / lowered

- In the operational mode Sewing the work clamp is raised/lowered.
- When entering the code number, this key corresponds to number 6.

Further functions can be selected with the keys described below, which are each equipped with an LED. When the LED lights up the corresponding function is activated / switched on.

Stitch density coarse/medium/fine

The key function depends on what is displayed on the screen, see **Chapter 10 Sewing.**
If the program number is displayed on the screen instead of the cut length, the 3 following keys are used as call-up keys for variable and special programs.

- When the cut length is displayed, the machine switches to **coarse** using the stitch density.
- When entering the code number this key corresponds to the figure 1.

- When the cut length is displayed, the machine switches to **medium** using the stitch density.
- When entering the code number this key corresponds to the figure 2.

- When the cut length is displayed, the machine switches to **fine** using the stitch density.
- When entering the code number this key corresponds to the figure 3.

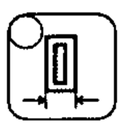

Buttonhole width

- After this function has been activated, the current buttonhole width value is displayed on the screen and can be altered with the corresponding **plus / minus key.**
- When entering the code number, this key corresponds to number 4.

Cut width/purl seam extension

- When this function is activated, the current values for the cut width (left) and the extension of the purl seam (right) are displayed on the screen and can be altered with the corresponding **plus/minus key.**
- When entering the code number, this key corresponds to number 5.

For control the width and length of the seams in relation to the knife opening. The left number controls the width and the right number controls the length.

Sewing mode

- With this key it is possible to switch between sewing mode (LED on) and parameter input (LED off).

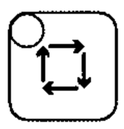

Double sewing cycle

- After this function has been activated, the buttonholes are sewn twice.
- When entering the code number, this key corresponds to number 7.

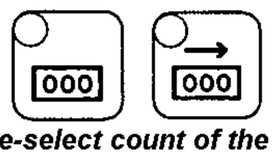

When changing the pre-select count of the bobbin counter, press the + on the right button

Piece counter / reverse counter

- When one of these functions is selected, the other function is deactivated.
  When the function is selected, the current value appears on the right hand side of the screen, the set value appears on the screen after the key is pressed twice and can be altered with the corresponding **plus / minus key.**
- When entering the code number, this key corresponds to number 8 (piece counter) or number 9 (reverse counter).

Enter

- This key is used to confirm an input and to acknowledge error corrections.

8 Installation and commissioning

The machine must only be installed and commissioned by qualified personnel!
All relevant safety regulations must be strictly adhered to!
If the machine is delivered without a table, be sure to use a stand and table top that can hold the weight of the machine with its motor.
It is very important to ensure that the stand of the machine is firm and steady, also during sewing.

8.01 Installation

The site where the machine is installed must be provided with suitable connections for electric current.
It must be ensured that the standing surface of the machine site is firm and horizontal, and that sufficient lighting is provided for.

For packing and transportation reasons the table top is in the lowered position.
The table height is adjusted as described below.

8.01.01 Adjusting the table height

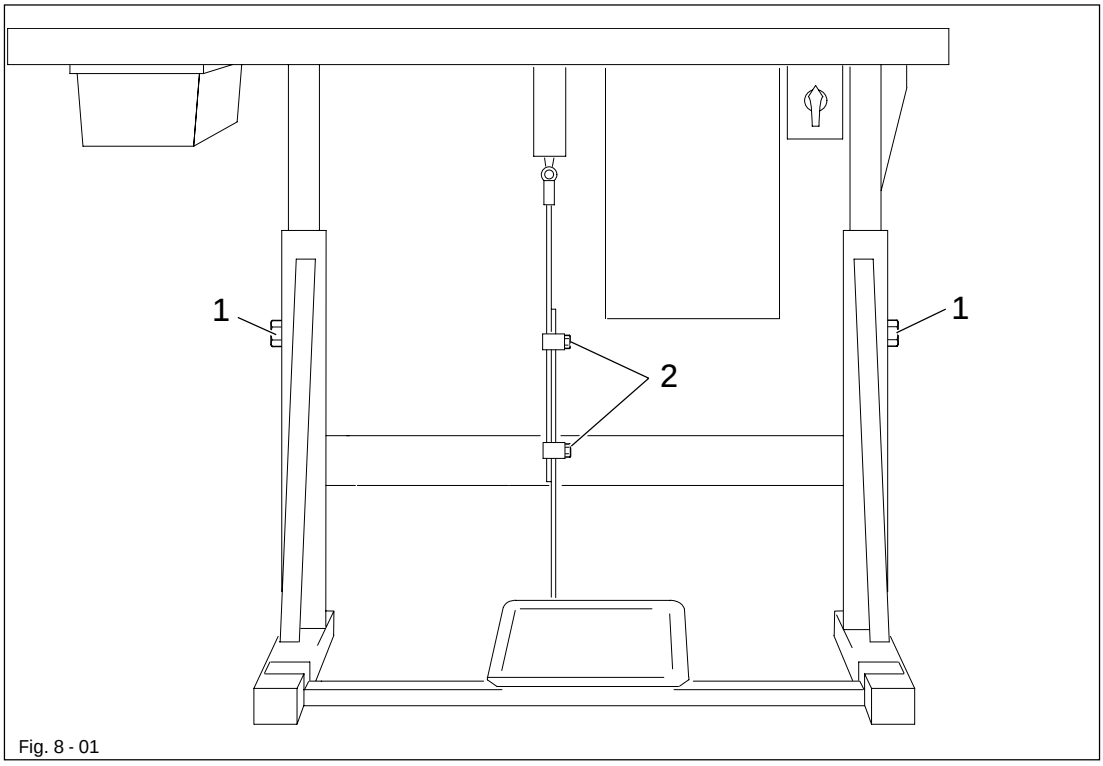

Fig. 8 - 01

- Loosen screws 1 and 2 and set the table height as required.
- Firmly tighten screw 1.
- Set the required pedal position and tighten screw 2.

8.01.02 Installation variants

The PFAFF 3119 can be installed in two different ways.

- Version A: Sewing crosswise to the table edge
- Version B: Sewing parallel to the table edge

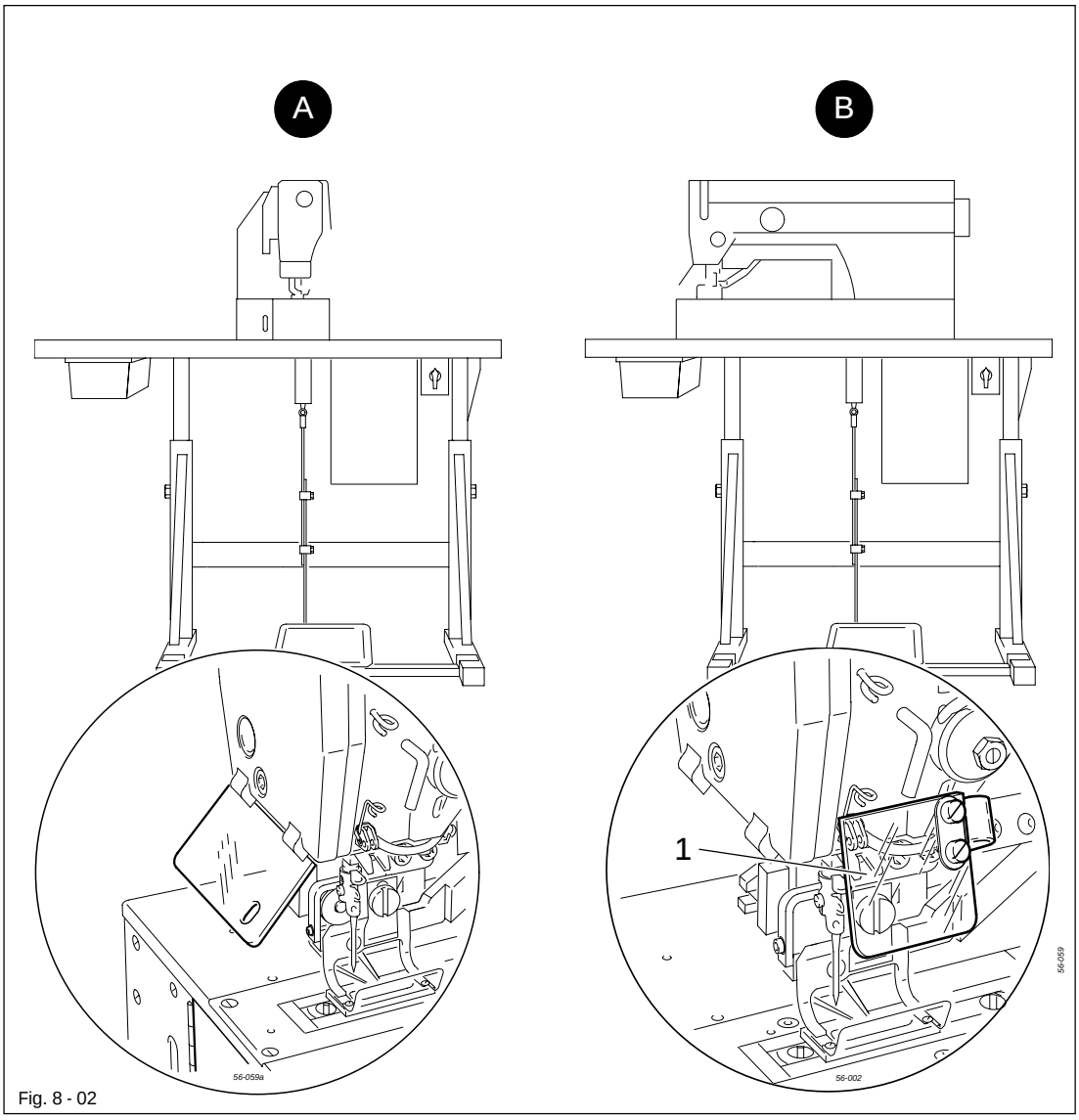

Fig. 8 - 02

When the machine is installed for "Sewing parallel to the table edge", the eye shield 1, part no. 91-160 383-90, must be fitted.

8.01.03 Connecting the plug-type connections

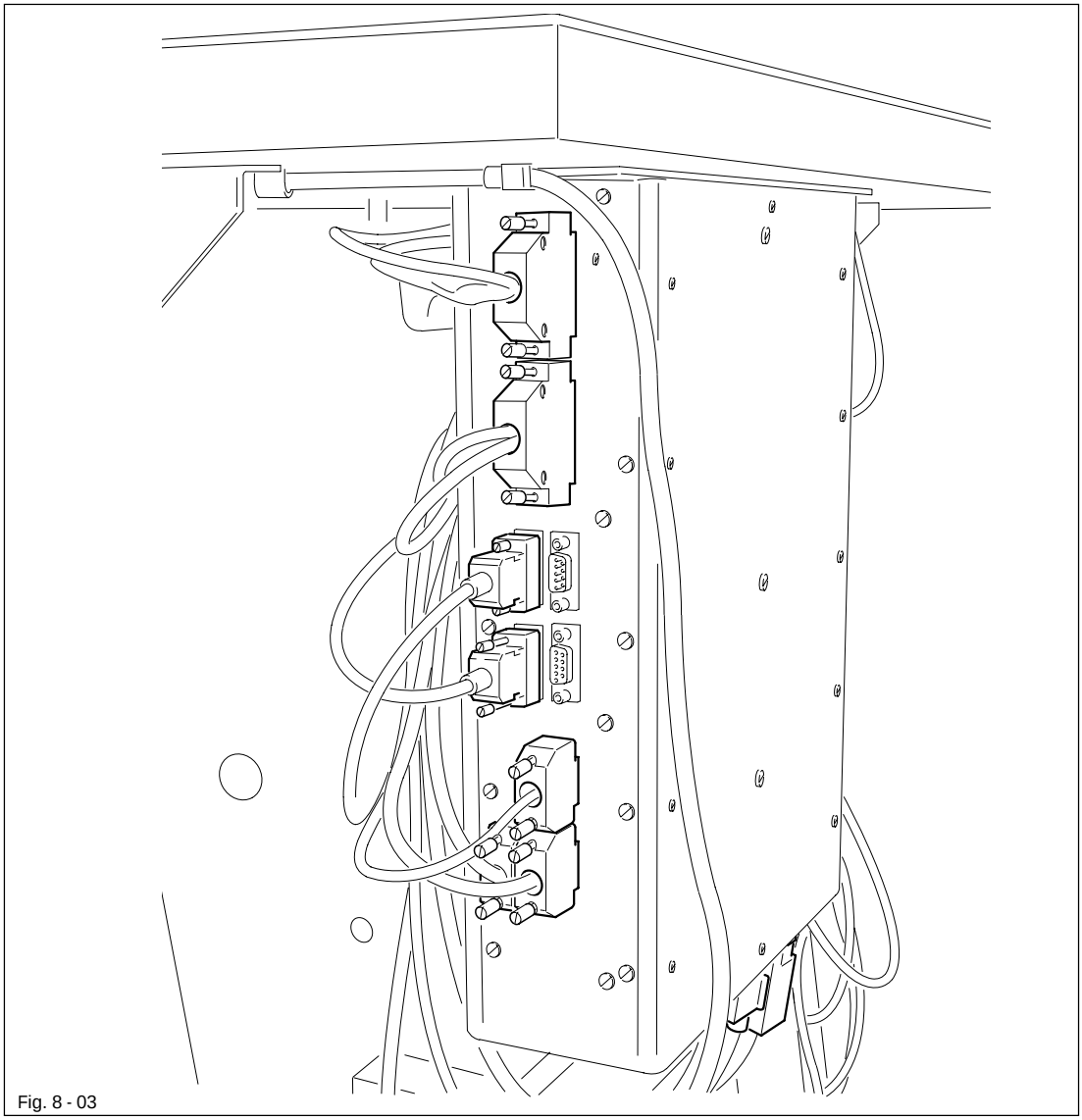

Fig. 8 - 03

- Connect all plugs 1 - 7 as labelled in the control box.

The serial interface 8 is used to transfer data between the PC and the machine control unit (e.g. for software updates, work with SAM and OSCA programs).

8.01.04 Fitting the reel stand

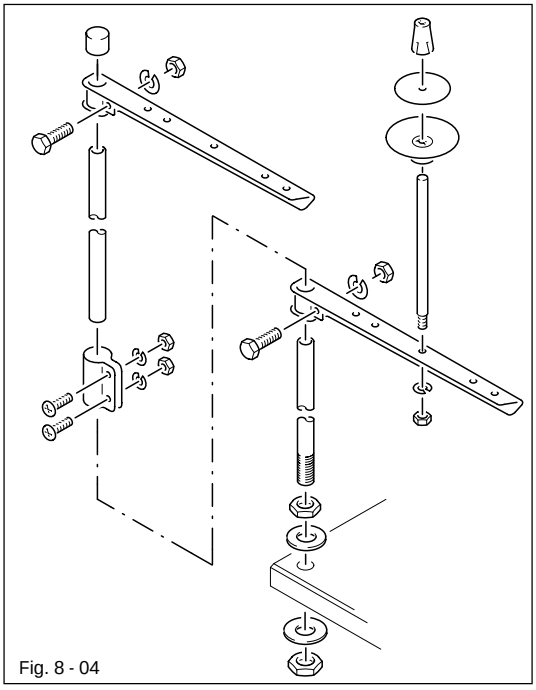

Fig. 8 - 04

- Fit the reel stand as shown in Fig. 8 - 04.
- Afterwards insert the stand in the hole in the table top and secure it with nuts provided.

8.02 Commissioning

- Clean the machine thoroughly and then check the oil level (see Chapter 12 Care and Maintenance).
- Check the machine, in particular the electric leads and pneumatic connection tubes, for any damage.
- Have mechanics ensure that the machine's motor can be operated with the available electricity supply.
- Connect the machine to the compressed air system. The manometer should show a pressure of 6 bar.
  If necessary, set this value (see Chapter 12.04 Checking / adjusting the air pressure).

8.03 Switching the machine on / off

- Switch the machine on or off (see Chapter 7.01 On/off switch).
- Setting up the machine control unit, see Chapter 8.04 Setting up the machine control unit.

8.04 Setting up the machine control unit

After the initial machine start up, first of all the allocation of the machine control unit to the machine sub-class being used must be checked and adjusted if necessary.

8.04.01 Establishing the sub-class

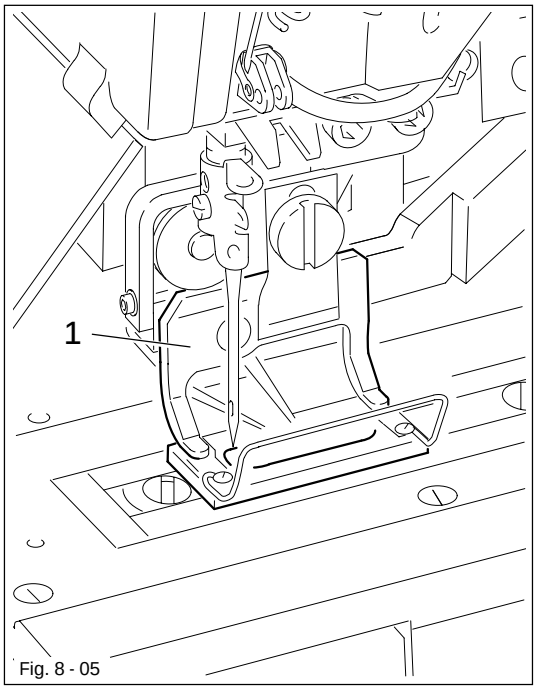

Fig. 8 - 05

- Measure the size of the cut-out in the work clamp 1.
- With the cut-out size and the aid of the following table, the sub-class and the parameter value "202" can be established.
- How to set parameter "202" is described in Chapter 8.04 Setting parameter "202".

Work clamp cut-out	Sub-class	Value for parameter "202"
30,0 x 5,6	3119-1/51, -1/52	1
40,0 x 5,6	3119-2/51	2
40,0 x 6,7	3119-2/53	3
44,0 x 6,7	3119-2/63	3
46,0 x 6,7	3119-3/51	4
55,0 x 7,0	3119-4/51	5

8.04.02 Setting parameter "202"

- Switch on the machine.

- Select operational mode Input (LED in the key is off).

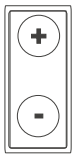

- Using the corresponding plus/minus key select the function group, e.g. "200".

- Confirm input with Enter.
- Enter the code, see Chapter 11.03 Entering/altering the access code.

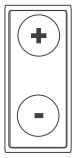

- Using the corresponding plus/minus key select e.g. parameter " 202" .

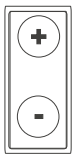

- Using the corresponding plus/minus key select the value for the established sub-class, e.g. "3" for sub-class 3119-2/53, see Chapter 8.04.01 Establishing the sub-class.

- Conclude parameter input by switching to operational mode Sewing.

9 Setting up

All instructions and regulations in this instruction manual must be observed. Special attention must be given to all safety regulations!

All setting-up work must only be done by personnel with the necessary training. For all setting-up work the machine must be isolated from its power supply by turning off the on/off switch or removing the machine plug from the electric power socket!

9.01 Inserting the needle

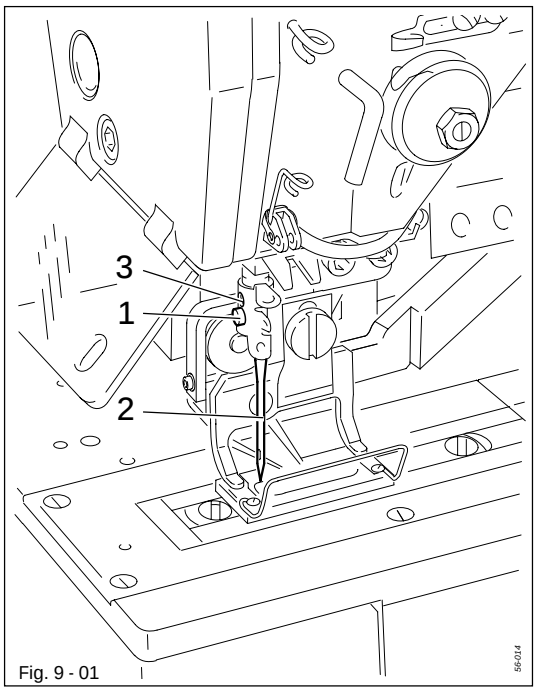

Fig. 9 - 01

Switch off the machine! Mechanically lock the knife using the knife engagement prevention key! Danger of injury from the needle and the knife!

- Loosen screw 1.
- Insert needle 2 as far as possible and with the long needle groove pointing in the direction of the knife.
- Tighten screw 1.

Through hole 3 it is possible to check, whether needle 2 has been inserted as far as possible.
By inserting suitable tools in hole 3, broken needles can be driven out.

9.02 Winding the bobbin thread / adjusting the preliminary thread tension

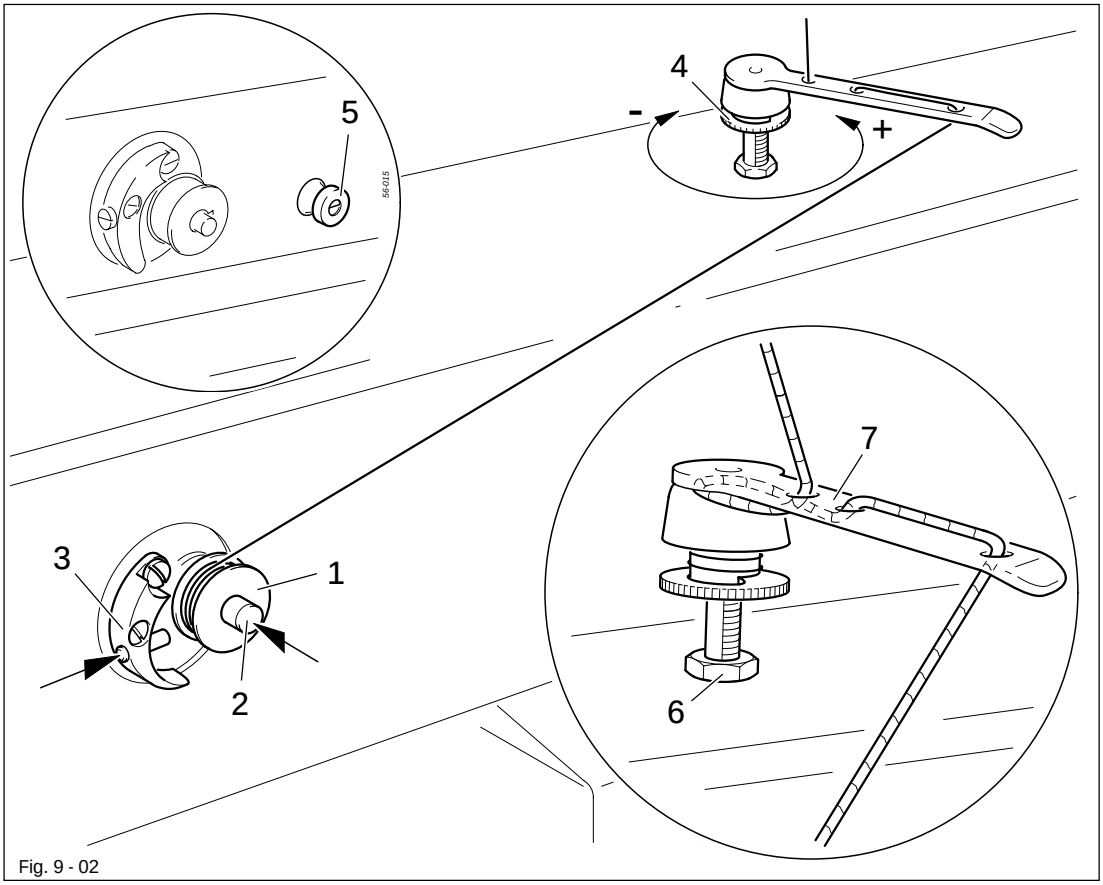

Fig. 9 - 02

- Place an empty bobbin 1 on winder spindle 2.
- Thread up as shown in Fig. 9 - 02 and wind the thread a few times clockwise around bobbin 1.
- Engage the bobbin winder by pressing spindle 2 and lever 3 simultaneously.

The bobbin is wound during sewing.

- The tension of the thread wound onto bobbin 1 is set on milled screw 4.
- The bobbin winder will stop when sufficient thread is wound onto bobbin 1.
- After winding the needle thread can be cut with thread knife 5.

If the thread is wound on unevenly:

- Loosen nut 6.
- Turn thread guide 7 as required.
- Tighten nut 6 again.

Winding the bobbin outside the sewing cycle.
With the Stop key it is possible to switch off the drive of the feeding mechanism and the knife, so that bobbin winding only takes place with pedal operation. To wind the bobbin, the needle thread must be removed.

9.03 Threading the bobbin case / adjusting the bobbin thread tension

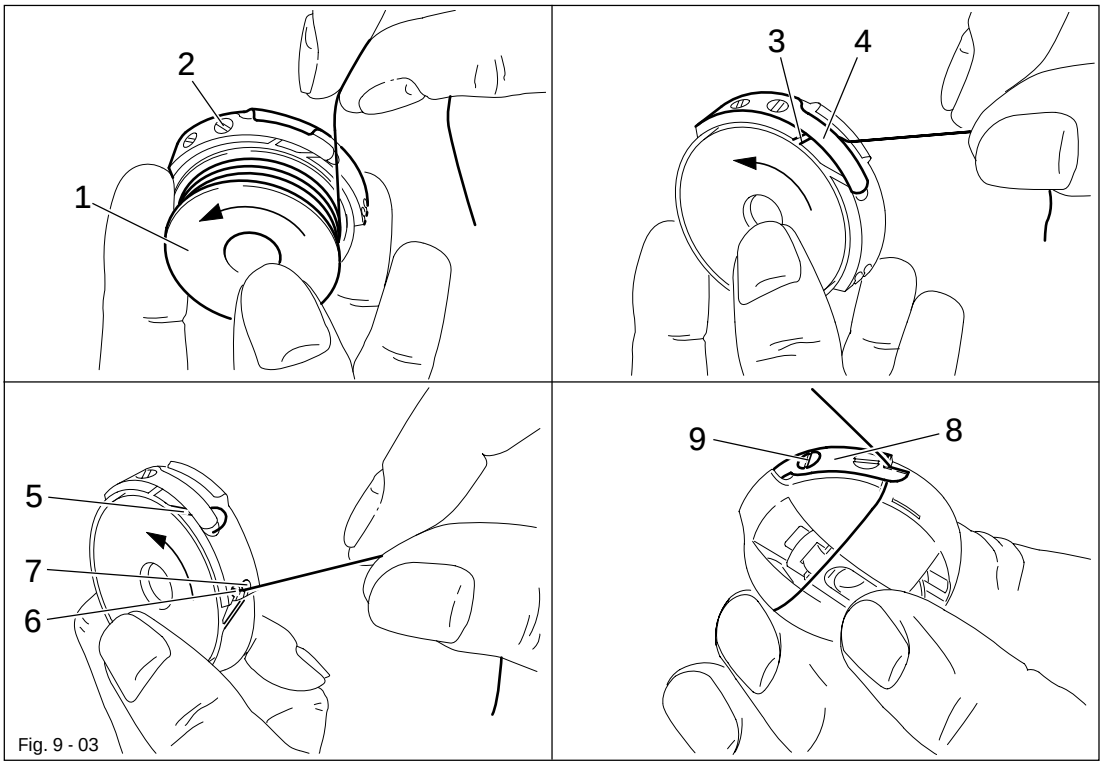

Fig. 9 - 03

- Insert the bobbin 1 in the bobbin case.
- First guide the thread into slot 3 and under spring 4.
- Then guide the thread into slot 5.

For purl buttonholes:

- Push thread through opening 6.

For flat buttonholes:

- Push thread through opening 7.

- Trim thread on thread knife 8.
- Adjust the thread tension by turning screw 9.
- To do so use the tools supplied.

When sewing flat buttonholes, the tension of the bobbin thread must be so high, that the bobbin thread is interlooped on the bottom side of the material.

9.04 Changing the bobbin

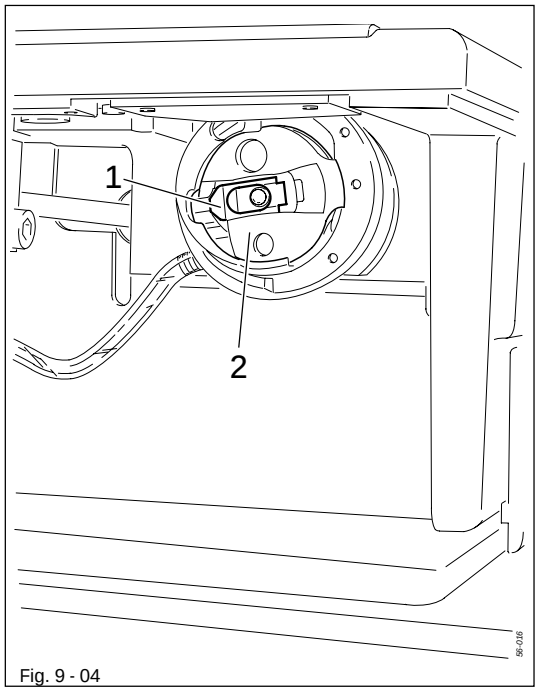

Fig. 9 - 04

Switch off the machine!
Lock the knife mechanically with the knife engagement prevention device! Danger of injury from the needle and the knife!

- Open the cover of the hook compartment.

Removing the bobbin:

- Raise latch 1 and remove bobbin case 2 together with the bobbin.

Inserting the bobbin:

- Raise latch 1 and insert bobbin case 2 together with the bobbin on the hook
- Release latch 1 and push the bobbin case onto the hook until you feel it snap into place.
- Close the cover of the hook compartment.

9.05 Threading the needle thread

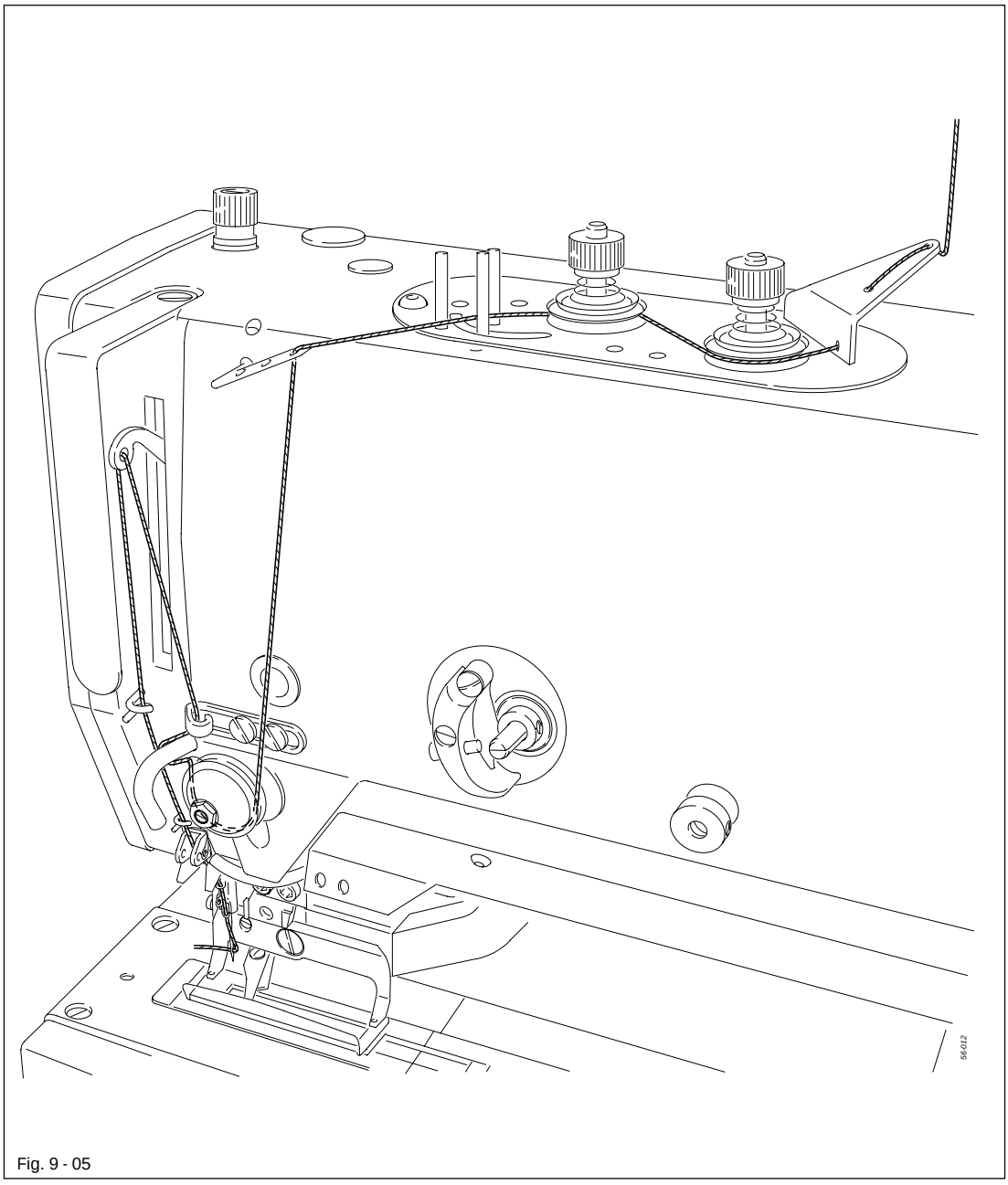

Fig. 9 - 05

Switch off the machine!
Lock the knife mechanically with the knife engagement prevention device!
Danger of injury from the needle and the knife!

- Thread the needle thread as shown in Fig. 9-05.

9.06 Selecting the buttonhole type

- Switch on the machine.

- Select operational mode Input (LED in the key **Operational mode Sewing** should not be on).

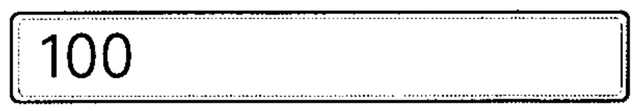

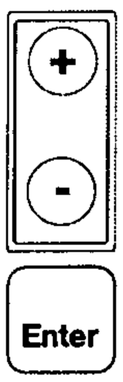

- Select the function group "100" with the appropriate **plus / minus key.**

- Confirm with **Enter.**

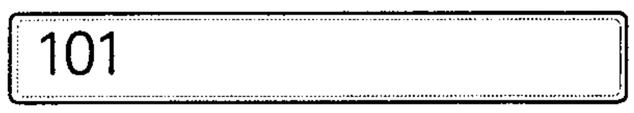

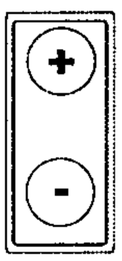

- Select parameter "105" (type of buttonhole) with the appropriate **plus / minus key.**

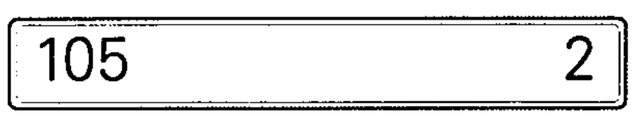

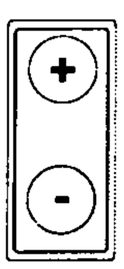

- Select appropriate buttonhole type (1-5) with the appropriate **plus / minus key:**
  - 1 - purl seam raised, bartack flat
  - 2 - completely flat
  - 3 - completely raised
  - 4 - first sewing cycle completely flat, second cycle completely raised (double sewing cycle)
  - 5 - first sewing cycle completely flat, second cycle purl seam raised, bartack flat (double sewing cycle)

- Switch to **Operational mode sewing** (LED in key is on).

NOTE:
To get from the parameters 200 or any other parameter back to the parameters 100, press the home key

9.07 Adjusting the needle thread tension

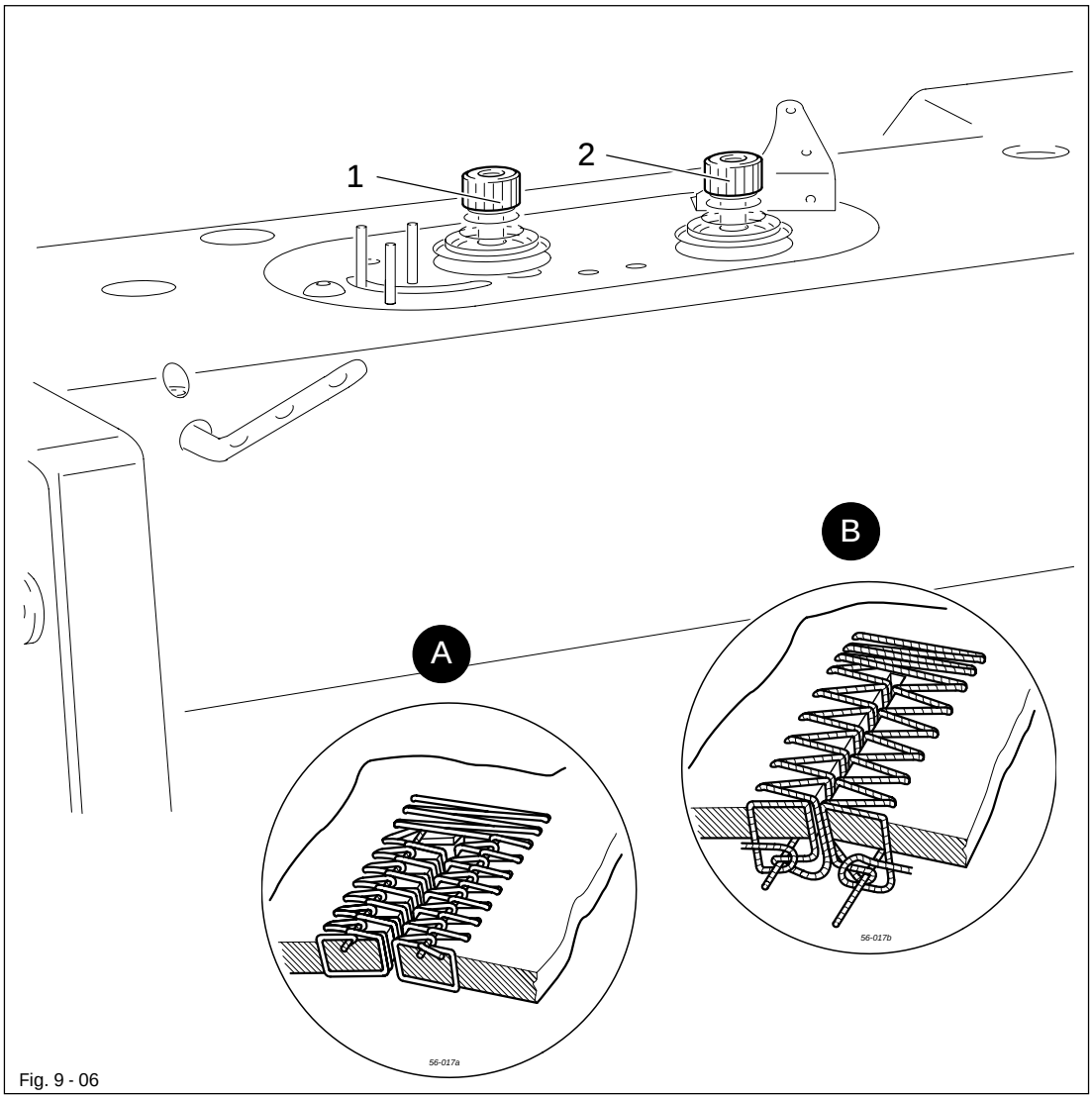

Fig. 9 - 06

- Thread and insert the bobbin case according to the required type of buttonhole, see Chapter 9.03 Inserting the bobbin case / adjusting the bobbin thread tension.
- Switch on the machine and select the required type of buttonhole (purl or flat buttonholes) on the control panel, see Chapter 9.06 Selecting the type of buttonhole.

For purl buttonholes (A):

- Open tension unit 1 to the full extent and adjust tension unit 2 so that the stitches are interlooped in the centre of the material.
- Adjust tension unit 1 so that the interloops of the purl seam stitches are pulled upwards.

For flat buttonholes (B):

- Adjust tension unit 2 (less tension) so that the interloops of the stitches are pulled to the bottom side of the material.

Carry out the adjustment with different coloured needle and bobbin threads.

9.08 Adjusting the work clamp pressure

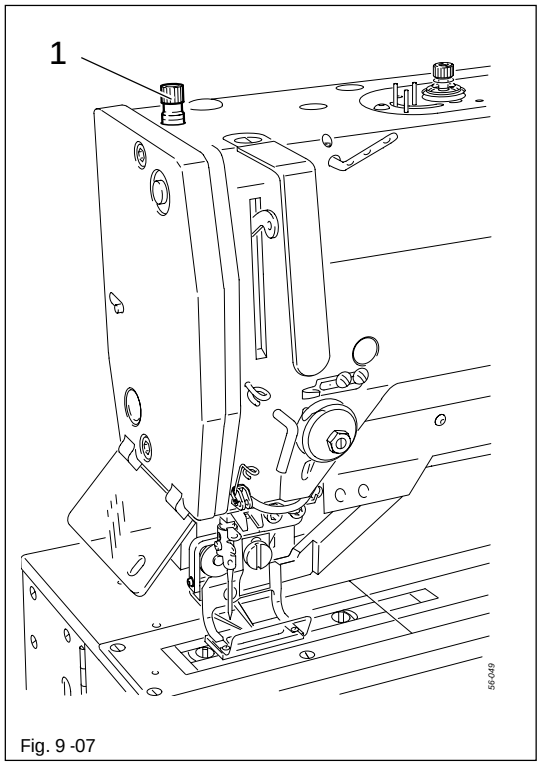

Fig. 9 -07

- Adjust the work clamp pressure by turning adjustment screw 1.

The sewing pressure depends on the material of the workpiece and must be adapted to this. It is set correctly when the workpiece is fed reliably and shows no feed signs.

10 Sewing

The machine must be installed and connected in accordance with Chapter 8 Installation and Commissioning.

- Set-up the machine, see Chapter 9 Setting-up.
- Switch on the machine, see Chapter 7.01 On/off switch.
  The machine is automatically in the operational mode Sewing.
- Start the sewing cycle with the pedal, see Chapter 7.02 Pedal.

The display on the operating panel and the operation of the machine depend on the pre-setting of parameter "103". With parameter "103" it is possible to choose whether the speed or buttonhole model should be displayed.

10.01 Operating panel with speed display

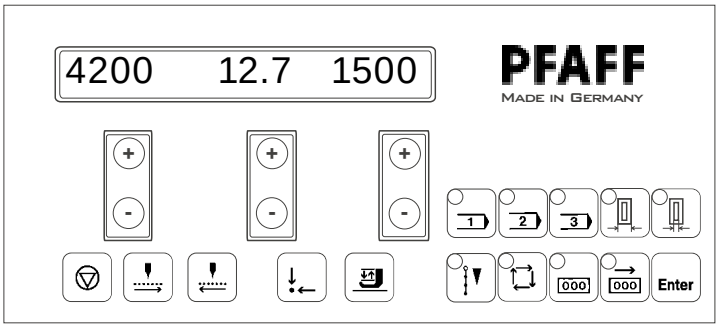

What is shown on the display screen:

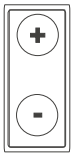

4200: Maximum speed
The value can be altered directly with the corresponding plus/minus key.

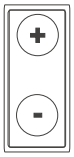

12.7: Cut length
The value can be altered directly with the corresponding plus/minus key.
The buttonhole is selected by selecting the cut length (from 6.4 mm to 38.1 mm depending on the sub-class) in conjunction with the selected stitch density.
After moving through the area with the cut length values, the program numbers of the stored variable and special programs appear on the display.
Only the program numbers occupied are displayed, variable programs from 1 to 39, special programs from 40-49. The selection keys for the stitch density are used as call-up keys for selecting these programs. The currently selected program number is stored on the corresponding selection key if the selection key is pressed for longer than 2 seconds.

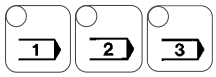

1500: Depending on the activated function (piece counter or reverse counter) the number of buttonholes already sewn or the number still to be sewn is displayed.

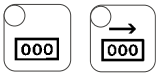

10.02 Operating panel with display of the buttonhole model

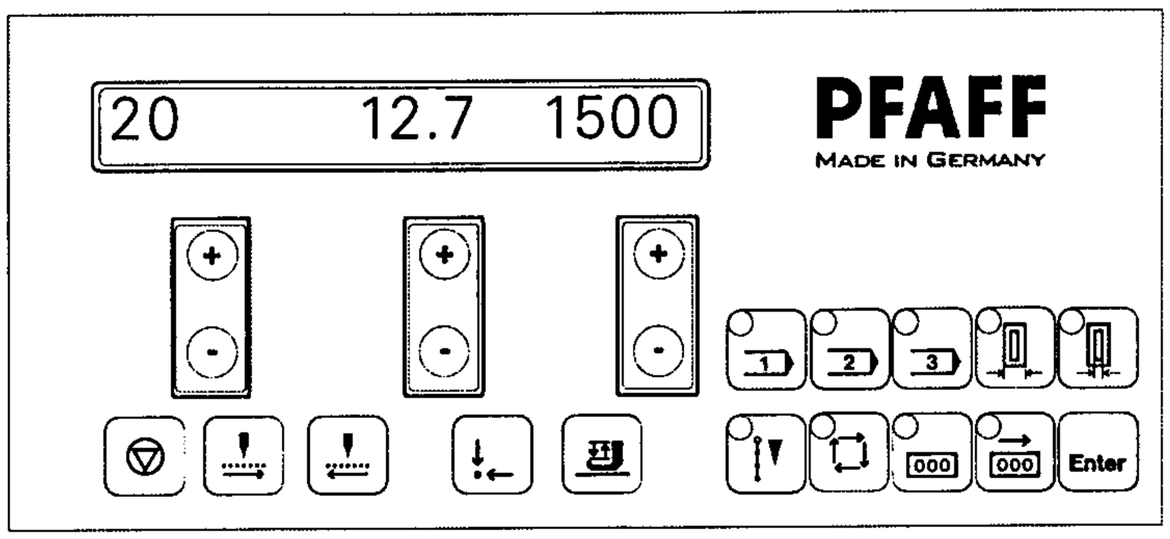

What is shown on the display screen:

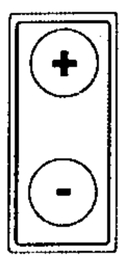

20: **Buttonhole model**
The buttonhole model can be altered with the corresponding **plus/minus key**. If variable programs are selected (see cut length) the number of the buttonhole model allocated to the variable program appears. No value is shown when special programs are selected.

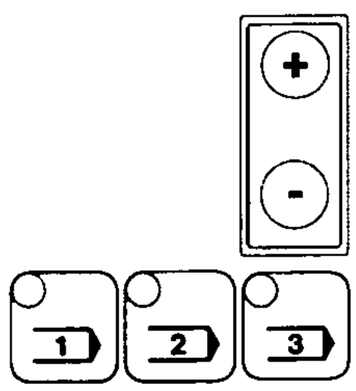

12.7: **Cut length**
The value can be altered directly with the corresponding **plus/minus key.**
The buttonhole is selected by selecting the cut length (from 6.4 mm to 38.1 mm depending on the sub-class) in conjunction with the selected **stitch density**.
After moving through the area with the cut length values, the program numbers of the stored variable and special programs appear on the display.
Only the program numbers occupied are displayed, variable programs from 1 to 39, special programs from 40-49.

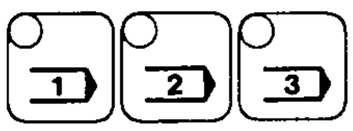

The selection keys for the stitch density are used as call-up keys for selecting these programs. The currently selected program number is stored on the corresponding selection key if the **selection key** is pressed for longer than 2 seconds.

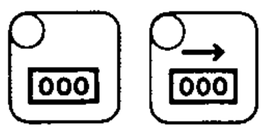

1500: Depending on the activated function (**piece counter** or **reverse counter**) the number of buttonholes already sewn or the number still to be sewn is displayed.

Select a variable program number (1 to 39), now press and hold the stitch density button for 2 to 3 seconds

10.03 Selecting a buttonhole

31 different buttonhole models can be selected. Depending on the sub-class up to 48 fixed programs are allocated to each model. The desired fixed program is selected by choosing the cut length and stitch density. With a maximum of 16 cut lengths and 3 stitch densities this gives a total of 48 fixed programs.

Buttonhole design:

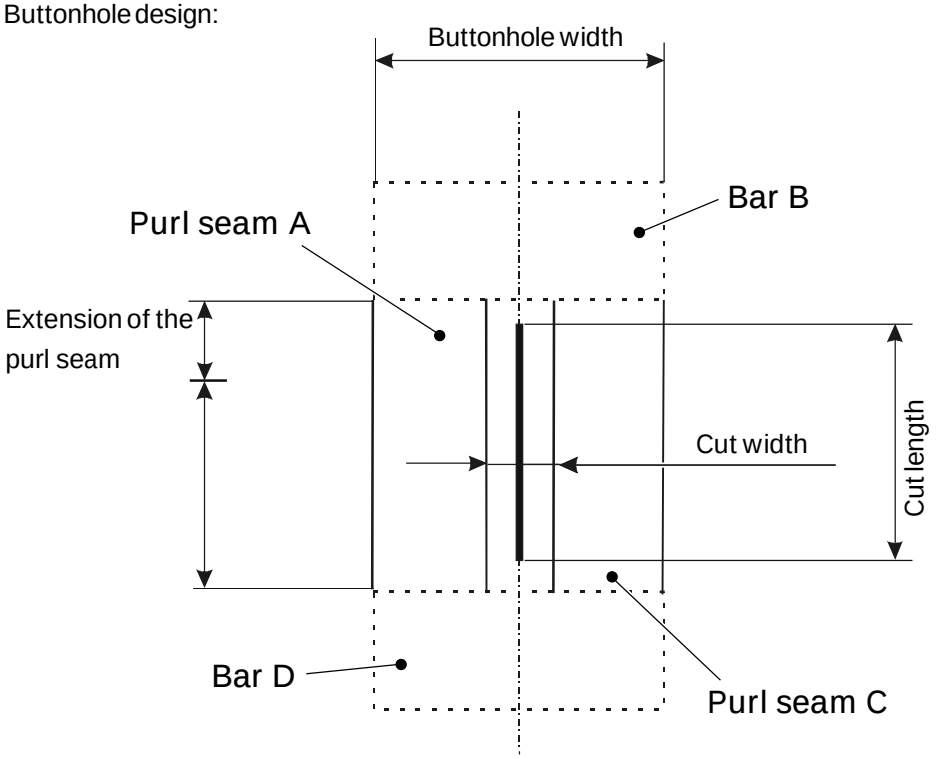

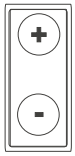

- Select the cut length (depends on the knife installed).

12,7

- Select the stitch density.

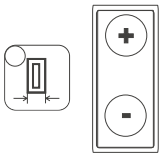

- If necessary adjust the buttonhole width.

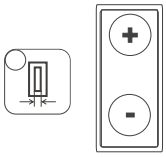

- If necessary adjust the cut width (left)/purl seam extension (right).

10.04 Selecting the cut length of the buttonhole

In general the cut length of the buttonhole is defined by the size of the knife installed.
With the "multiple cut" function it is possible to make larger buttonhole cut lengths.

IMPORTANT NOTE:

To avoid premature wear of the cutting equipment we recommend the use of a knife matching the buttonhole length.

Activating the multiple cut function

- Switch on the machine.

- Select the operational mode Input (LED in the key **is off**).

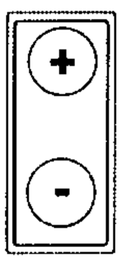

- Select the function group, e.g "200", with the corresponding **plus/minus key**.

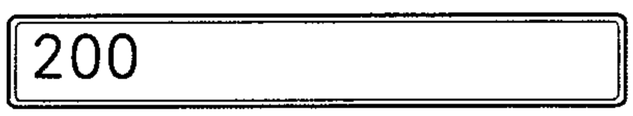

- Confirm the input with **Enter**.
- Enter the code, see **Chapter 11.03 Entering/altering the access code.**

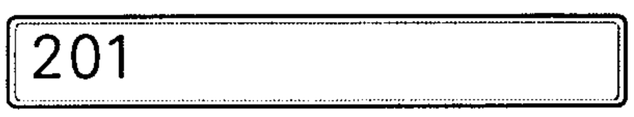

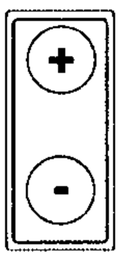

- With the corresponding **plus/minus key** select e.g. parameter "207" (multiple cutting).

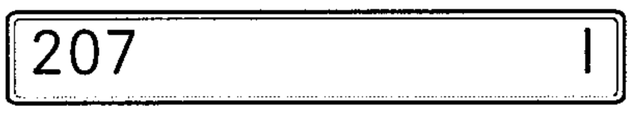

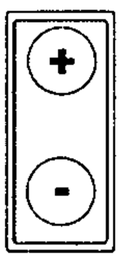

- Activate the multiple cutting function with the corresponding **plus/minus key**.

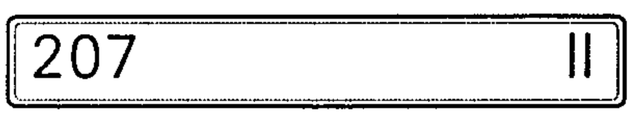

- The knife length and cut overlap must then be entered.

Entering the knife length and cut overlap

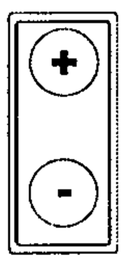

- With the corresponding **plus/minus key** select e.g. the parameter "208" (knife length and cut overlap of the knife installed).

208	6.4	0.0

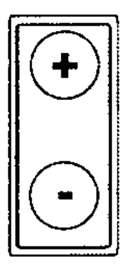

- With the corresponding **plus/minus key** select the knife length, e.g. 16.0 mm.

208	16.0	0.0

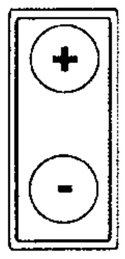

- With the corresponding **plus/minus key** select the cut overlap, e.g. 0.5 mm.

The amount of overlaping of the second stroke of the knife.

208	16.0	0.5

Overlaping means that the second cutting cycle of the knife down overlaps the first cut cycle by this amount. This is only true if the knife has to cycle more than twice to cut the buttonhole opening

- Conclude the parameter input by switching to operational mode Sewing (LED in the key is on).

IMPORTANT

When the length of the button hole requires that the knife does multiple cutting, the length of the knife must be entered at parameter 208 to keep from damaging the presser foot

11 Input

In the operational mode Input the values of the machine parameters can be altered, e.g. for setting up the machine or for creating/modifying seam programs.

11.01 Summary of the function groups and parameters

Operational mode Input (LED is off)

- 100 Operating staff
  - 101 Knife suppression
    - I off
    - II on
  - 102 Stop – needle thread fault
    - I off
    - II on
  - 103 Display in Sewing mode
    - I Buttonhole model
    - II Speed
  - 104 Display software version
  - 105 Buttonhole type
    - 1 Raised purl seam, flat bar
    - 2 Flat purl seam and bar
    - 3 Raised purl seam and bar
    - 4 Cycle 1, flat purl seam and bar
Cycle 2, raised purl seam and bar
    - 5 Cycle 1, flat purl seam and bar
Cycle 2, raised purl seam, flat bar
  - 106 Buttonhole model (see Chapter 11.05.03)
  - 107 Maximum speed
  - 108 Number of securing seam cycles (only for buttonhole model 2)
- 200 Specialists
  - 201 Deleting variable programs
  - 202 Sub-class
    - 1 –1/51 and –1/52
    - 2 –2/51
    - 3 –2/53 and –2/63
    - 4 –3/51
    - 5 –4/51
  - 203 PC connection
  - 204 Bobbin thread monitor
    - 1 on
    - II off
  - 205 Needle thread monitor
    - 1 on
    - II off
  - 206 Copying programs
  - 207 Multiple cuts
    - 1 off
    - II on
  - 208 Enter knife length and cut overlap
  - 209 Double cycle with offset stitch
    - 1 Full number of stitches per cycle
    - 2 Half number of stitches per cycle
  - 210 Knife release
  - 211 Number of finishing stitches
- 300 Programming (see Chapter 11.05.02, 11.05.04 and 13.47.02)
- 400 Times (see Chapter 13.47.02)
- 500 Counters and speeds (see Chapter 13.47.02)
- 600 Service (see Chapter 13.47.02)
- 700 Sewing motor (see Chapter 13.47.02)
- 800 Access rights (see Chapter 11.04 and 13.47.02)

11.02 Selecting the function group and altering the parameters

- Switch on the machine.
  After the machine is switched on, the operational mode Sewing is activated automatically.

- By pressing the key activate Operational mode Input (LED in the key is off).

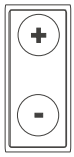

- Select the desired function group with the corresponding plus/minus key.
  On delivery only the function group "100" has free access, the other function groups are protected from unauthorised access by a code.

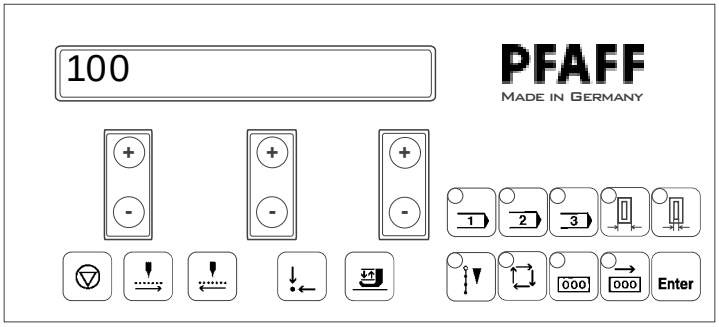

- The function group is selected by pressing Enter.

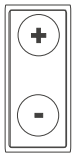

- Select the desired parameters and alter the desired value using the corresponding plus/minus key.

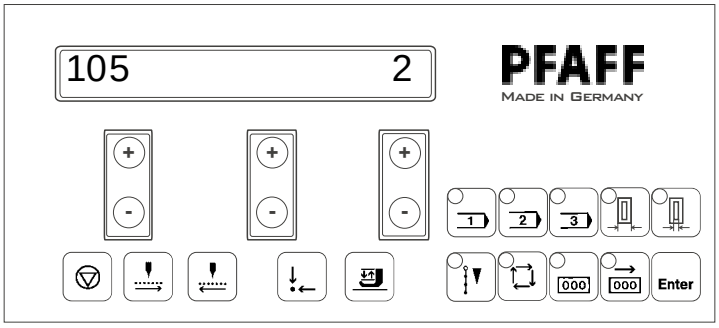

- When the Enter key is pressed, the altered value is saved and the next parameter is selected.

or

- When Operation mode Sewing is selected the altered value is saved and the machine changes to the operational mode sewing (LED in the key is on).

or

- when the Reset key is pressed the altered value is not saved and the function group selection is called up.

11.03 Entering / altering the access code

- Switch on the machine.

- Switch to parameter input (LED in the key is not on).

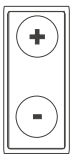

- Select the function group "800" with the appropriate plus / minus key.

800

- Confirm with Enter.

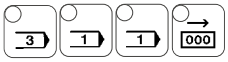

- Enter code
  The numbers are entered with the appropriate function keys as illustrated below. The factory code setting is "3119".

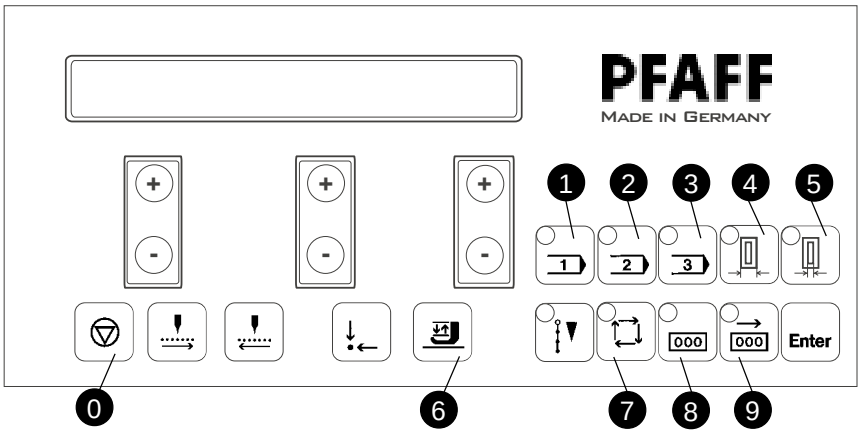

Code: 3119

- Confirm input with Enter.

801 0

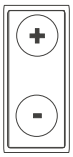

- To change the access code, select parameter "819" (enter access code) with the appropriate plus / minus key.

819 3119

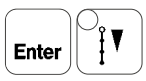

- Enter the new code number and take it over with Enter or by selecting Operational mode sewing.

11.04 Allocating access rights

- Switch on the machine.

- Switch to parameter input (LED in the key is not on).

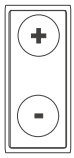

- Select the function group "800" with the appropriate plus / minus key.

- Confirm input with Enter.

- Enter code (e.g. 3119)

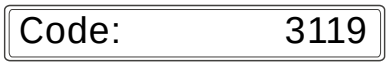

- Confirm input with Enter.

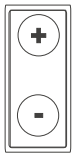

- Select the required parameter "801" to "818" with the appropriate plus / minus key, see Chapter 13.44 Parameter settings.

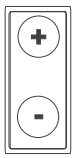

- Release or lock the selected parameter with the appropriate plus / minus key.
  - 0: Parameter function is freely accessible.
  - 1: Parameter function only available after access code has been entered.

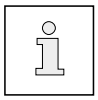

If all parameters (801 to 818) are set at "0", no further enquiry for the access code ensues.

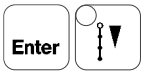

- Take over setting with Enter or by selecting Operational mode Sewing.

11.05 Variable programs

39 variable programs can be stored in the machine. A variable program can be selected with the program number 1 to 39.
Variable programs can be created by copying and altering the desired parameters of an existing program or by entering completely new parameters.

Program number 40 is a special program and cannot be changed.

11.05.01 Copying programs

If there is a program in the machine which corresponds approximately to the required program, this can be copied and then altered. This method is particularly suitable if e.g. only one parameter has to be altered, to achieve the desired result.

- Switch on the machine.

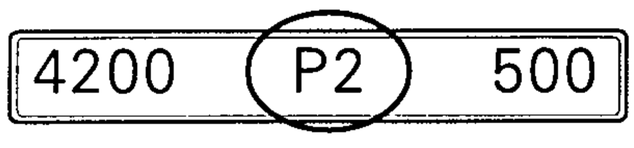

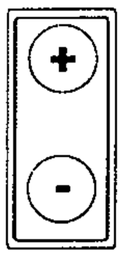

- Select the fixed or variable program to be copied with the corresponding **plus/minus key** using the cut length or program number (e.g. P2).

- Select the operational mode Input (LED in the key **is off**).

- Select function group "200" using the corresponding **plus/minus key**.

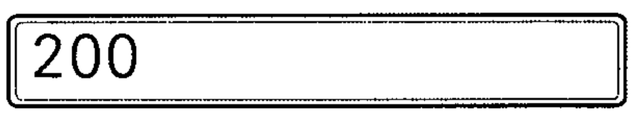

- Confirm the input with **Enter**.

- Enter the code, see **Chapter 11.03 Entering/altering the access code.**

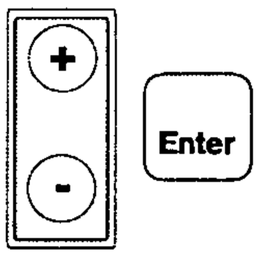

- Select parameter "206" (copying program) with the corresponding **plus/minus key** and confirm with **Enter.** On the display the next free program number appears after the parameter (variable programs from 1 – 39).

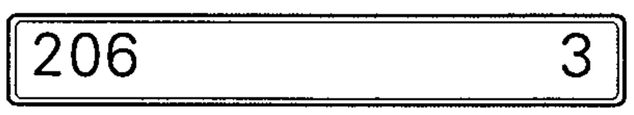

- Confirm the input with **Enter**.
  The next steps for altering the program are described in **Chapter 11.05.02 Creating/ modifying variable programs.**

11.05.02 Creating/modifying variable programs

A variable program is written with the parameters of the function group "300".
The variable program can be adapted to individual requirements by altering individual parameters.

As illustrated below variable programs consist of 4 sections:

- Purl seam A
- Purl seam C
- Bar B
- Bar D

In addition to the purely geometrical data a variable program is also defined by further parameters:

- Buttonhole model, see Chapter 11.05.03
- Number of stitches A, B, C, D
- Secondary thread tension A, B, C, D

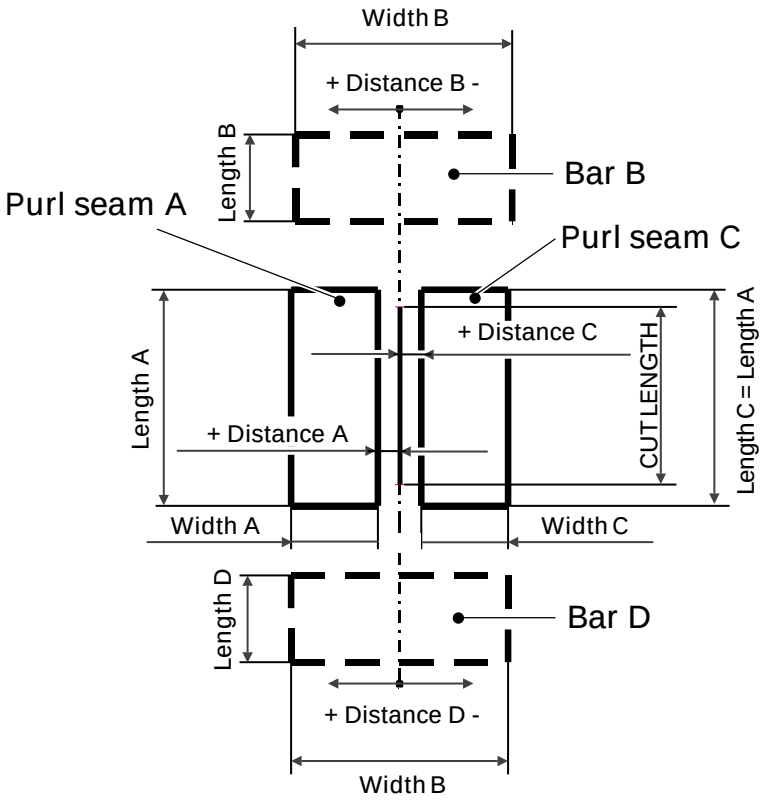

Parameter	Description
301	Program number
302	Cut length (mm)
303	Buttonhole model
304	Distance A (mm)
305	Width A (mm)
306	Length A (mm)
307	Number of stitches A
308	Secondary thread tension A
309	Width B (mm)
310	Width B1 (mm)
311	Length B (mm)
312	Length B1 (mm)
313	Number of stitches B
314	Distance B (mm)
315	Secondary thread tension B
316	Distance C (mm)
317	Width C (mm)
318	Length C (mm
319	Number of stitches C
320	Secondary thread tension C
321	Width D (mm)
322	Width D1 (mm)
323	Length D (mm)
324	Length D1 (mm)
325	Number of stitches D
326	Distance D (mm)
327	Secondary thread tension D

11.05.03 Buttonhole models

The following table shows all buttonhole models with their relevant bars.

Number	Buttonhole model	Bar B	Bar D
1		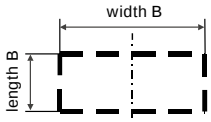	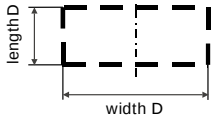
2	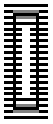	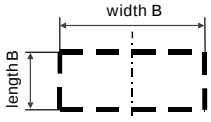	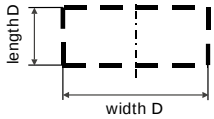
3		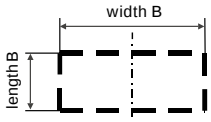	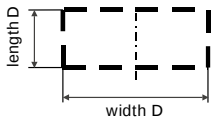
4		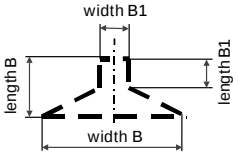	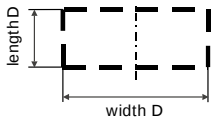
5		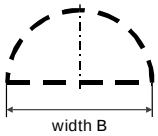	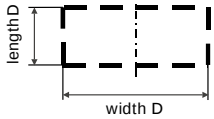
6		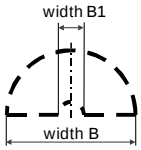	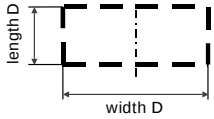
7		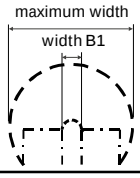	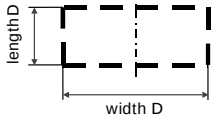
8		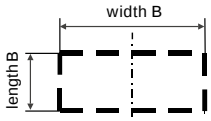	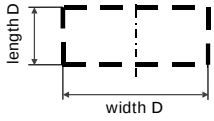
9		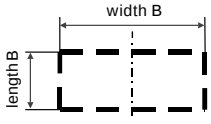	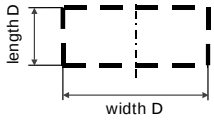
10		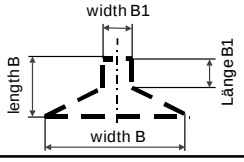	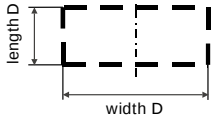

Number	Buttonhole model	Bar B	Bar D
11		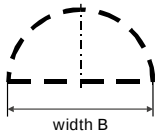	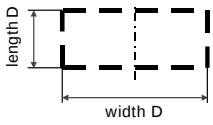
12		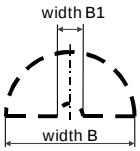	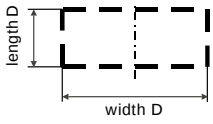
13		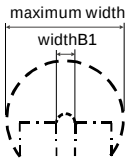	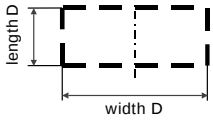
14		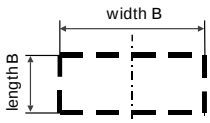	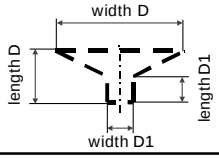
15	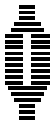	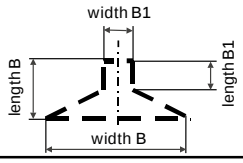	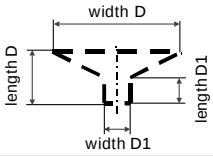
16		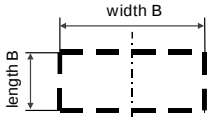	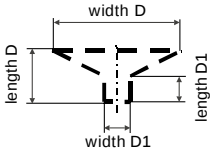
17		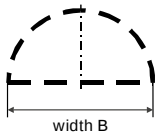	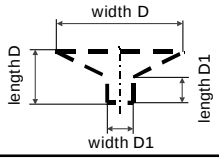
18	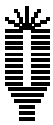	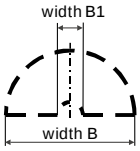	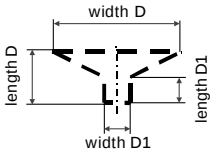
19		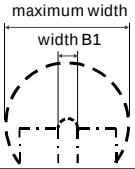	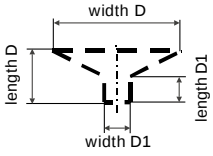
20		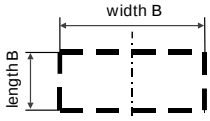	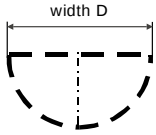
21		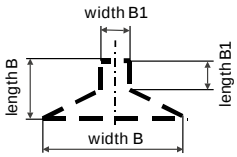	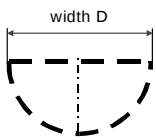

Number	Buttonhole model	Bar B	Bar D
22	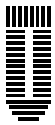	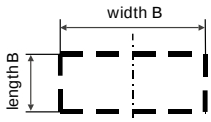	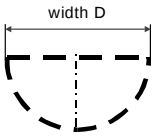
23		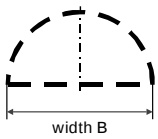	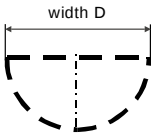
24		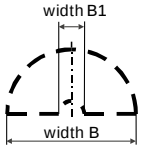	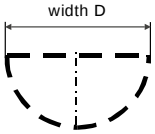
25		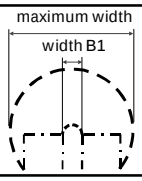	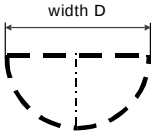
26		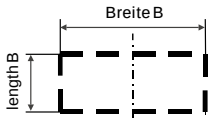	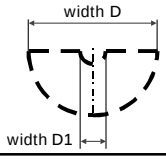
27		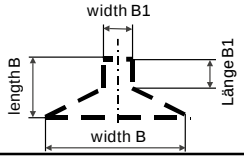	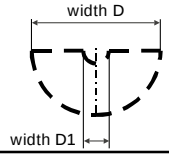
28		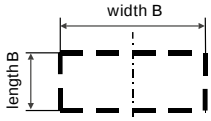	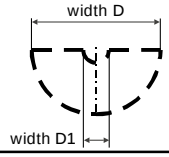
29		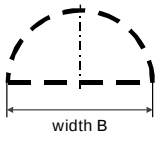	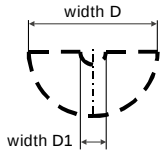
30		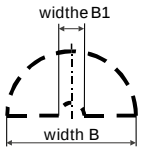	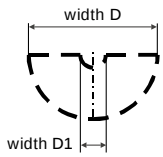
31		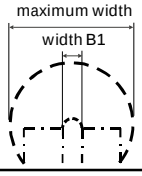	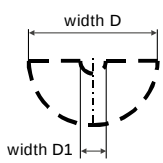

11.05.04 Table for recording personal variable programs

Parameter	Description	Value for Program No.:	Value for Program No.:	Value for Program No.:	Value for Program No.:
301	Program number				
302	Cut length (mm)				
303	Buttonhole model				
304	Distance of left purl seam from centre of cutting line = distance A (mm)				
305	Width of left purl seam = width A (mm)				
306	Length of left purl seam (same length as right purl seam) = length A (mm)				
307	Number of stitches in left purl seam = number of stitches A				
308	Secondary thread tension left purl seam				
309	Width of 1st bar = width B (mm)				
310	Second width of 1st bar = width B1 (mm)				
311	Length of 1st bar = length B (mm)				
312	Second length of 1st bar = length B1 (mm)				
313	Number of stitches in 1st bar = number of stitches B				
314	Distance of 1st bar to centre of cutting line = distance B (mm)				
315	Secondary thread tension of 1st bar				

Parameter	Description	Value for Program No.:	Value for Program No.:	Value for Program No.:	Value for Program No.:
316	Distance of right purl seam from cutting line (needle penetration left) = distance C (mm)				
317	Width of right purl seam = width C (mm)				
318	Length of right purl seam (same length as left purl seam) = length C (mm)				
319	Number of stitches in right purl seam = number of stitches C				
320	Secondary thread tension right purl seam				
321	Width of 2nd bar = width D (mm)				
322	Second width of 2nd bar = width D1				
323	Length of 2nd bar = length D (mm)				
324	Second length of 2nd bar = length D1 (mm)				
325	Number of stitches in second bar = number of stitches D				
326	Distance of second bar to centre of cutting line = distance D (mm)				
327	Secondary thread tension of 2nd bar				

11.06 Special programs

The programs 40 to 49 are reserved for special programs. With the programming software OSCA the seam contours are freely programmed on a PC in the available sewing area, which depends on the sub-class. The images are then transferred by connecting the PC to the machine.

11.07 PC-programs (optional)

11.07.01 SAM (Sewing Application Manager)

SAM is an easy PC program for saving all machine data and for programming variable programs with the support of graphics. The details of the SAM functions are:

- Administration of all fixed, variable and special programs
- Visualisation of all programs (parameters, shape and stitch position)
- Creation of variable programs with the support of graphics by entering parameters
- Transfer of variable and special programs from and to the machine
- Saving and restoring of all variable programs, special programs, machine data, configuration data of the machine
- Flash programming (software update of the machine)

11.07.02 OSCA (On-/Offline Sewing Creativity Arrangement)

OSCA is a PC-program for programming free seams with the support of graphics. Depending on the sub-class it is possible to program any seam line in the available sewing area.
OSCA is also used to create the special programs 40 to 49. These programs can then no longer be altered in the machine. To transfer data to the machine the PC is connected to the machine with a serial cable.

11.07.03 Data transfer between PC (SAM) and PFAFF 3119

For the data transfer the PC and the machine are connected to each other with a serial cable.

- Switch off the machine and the PC
- Connect the serial interface (RS232) and the serial PC-interface (COM 1 – 4) with the cable provided.
- Switch on the PC, if necessary install SAM with the cable provided.
- Start SAM ("Start" – "Programs" – "SAM") and set up the corresponding COM-interface in the menu "settings".
- Switch on the machine.
- Select parameter "203" (PC-connection).

- Press Enter.
- "203 ONLINE" appears on the display and the machine is in slave mode, i.e. all further actions will be triggered by SAM.
- Produce a connection to the machine using the menu "set up machine connection".
- If the connection was successful, all transfer functions (e.g. saving data, sending programs, loading) are available in the corresponding menus.

- SAM can cut off the connection to the machine with the menu "terminate machine connection". The machine leaves its slave mode and changes to function group 200.
- The cable on the machine's serial interface can be removed.

- Conclude the procedure with the Enter key, by selecting the Operational mode Sewing or with the Reset key.

12 Care and maintenance

Clean the hook compartment	daily
Clean the entire machine	once a week
Clean air filter of air filter / lubricator	as required
Check the air pressure	daily, before use
Check the oil level	daily, before use

These maintenance intervals are calculated for the average running time of a single shift operation. If the machine is operated for longer periods, shorter maintenance intervals are recommended.

12.01 Cleaning the machine

The cleaning cycle required for the machine depends on following factors:

- Single or several shift operation
- Amount of dust resulting from the workpiece

It is therefore only possible to stipulate the best possible cleaning instructions for each individual case.

For all cleaning work the machine must be disconnected from the mains by switching off the on/off switch or by removing the mains plug, and the knife must be mechanically locked to prevent knife engagement!
Danger of injury if the machine suddenly starts up or if the knife suddenly drops down.

To avoid breakdowns, the following cleaning work is recommended for single shift operation:

- Clean hook compartment and needle area of sewing head several times daily.
- Clean the entire machine at least once a week.

12.02 Cleaning the hook compartment

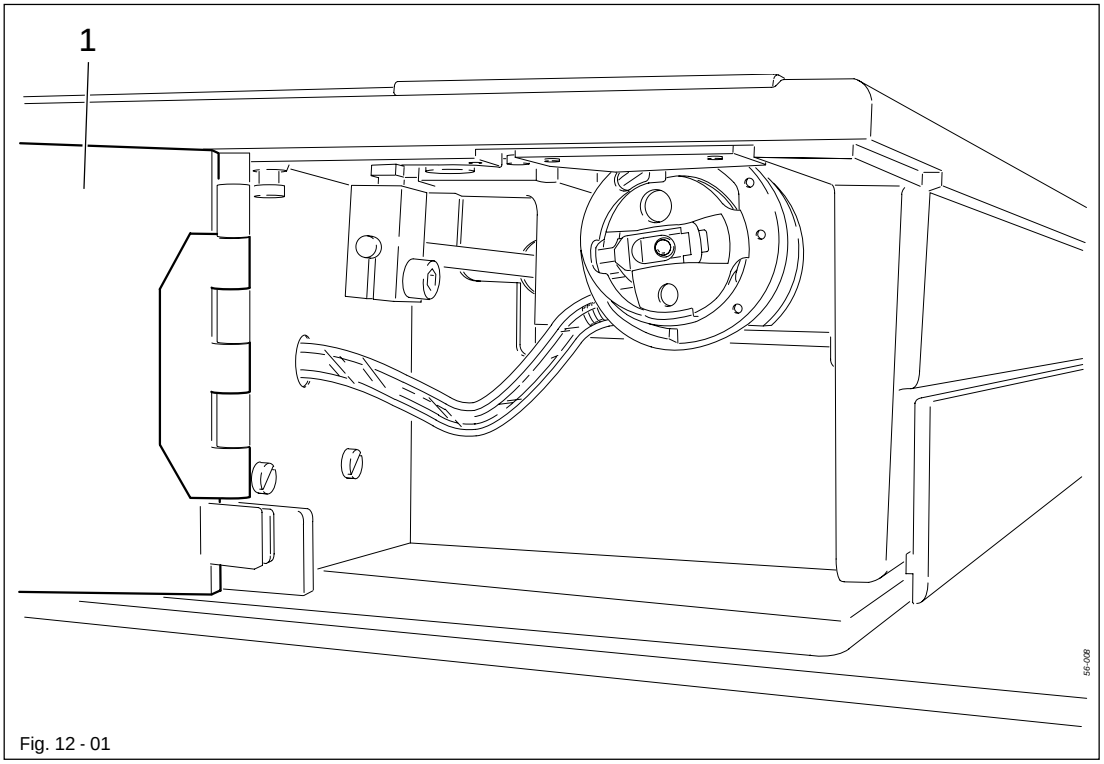

Fig. 12 - 01

Switch off the machine!
Lock knife mechanically to prevent knife engagement!
Danger of injury from the needle and knife!

- Open hook compartment cover 1.
- Clean the hook and hook compartment daily, more often if in continuous use.

12.03 Cleaning the air filter of the air-filter / lubricator

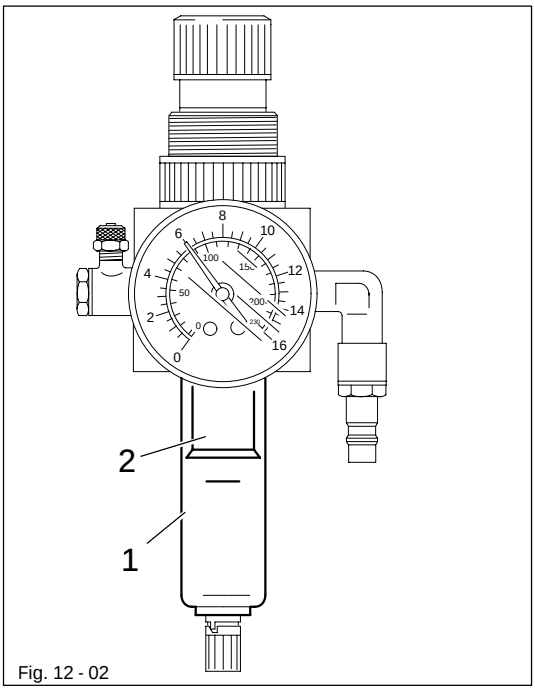

Fig. 12 - 02

Switch the machine off!
Disconnect the air hose at the air-filter / lubricator.

To drain water bowl 1:

- Water bowl 1 drains itself automatically whe the compressed-air hose is disconnected from the air-filter / lubricator.

Cleaning filter 2:

- Unscrew water bowl 1.
- Take out filter 2.
- Clean filter 2 with compressed air or isopropyl alkohol (part No. 95-665 735-91).
- Screw in filter 2 and screw on water bowl 1.

12.04 Checking/adjusting the air pressure

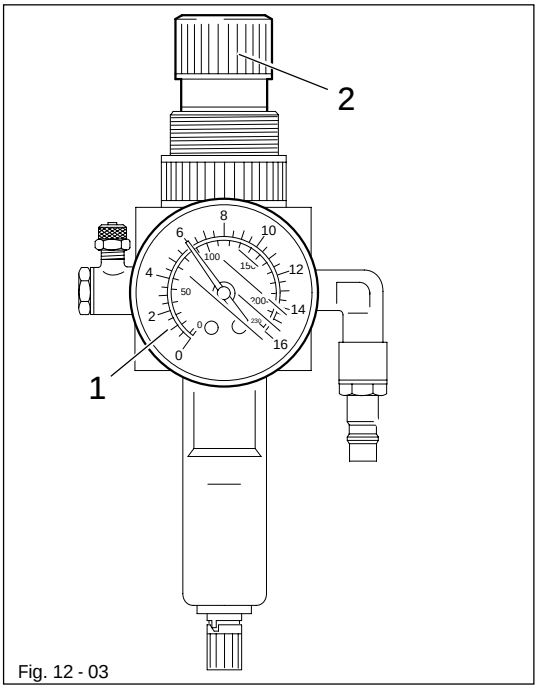

Fig. 12 - 03

- Before operating the machine, always check the air pressure on gauge 1.
- Gauge 1 must show a pressure of 6 bar.
- If necessary adjust to this reading.
- To do so, pull knob 2 upwards and turn it so that the gauge shows a pressure of 6 bar.

12.05 Oil level for needle drive unit

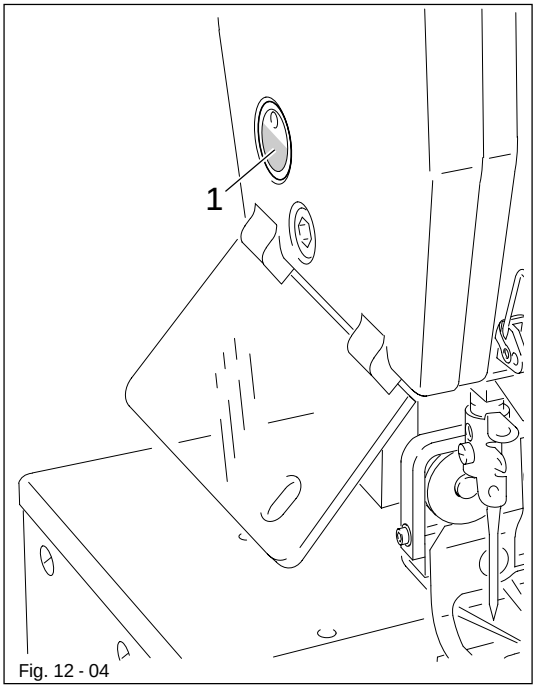

Fig. 12 - 04

There must always be oil in the storage tank.

- If necessary top up oil through hole 1 in the sight glass.

Only use oil with a medium viscosity of 10.00 mm²/s at 40ºC and a density of 0.847 g/cm³ at 15ºC.

We recommend PFAFF sewing machine oil,
part no. 280-1-120 105.

12.06 Oil level for the hook

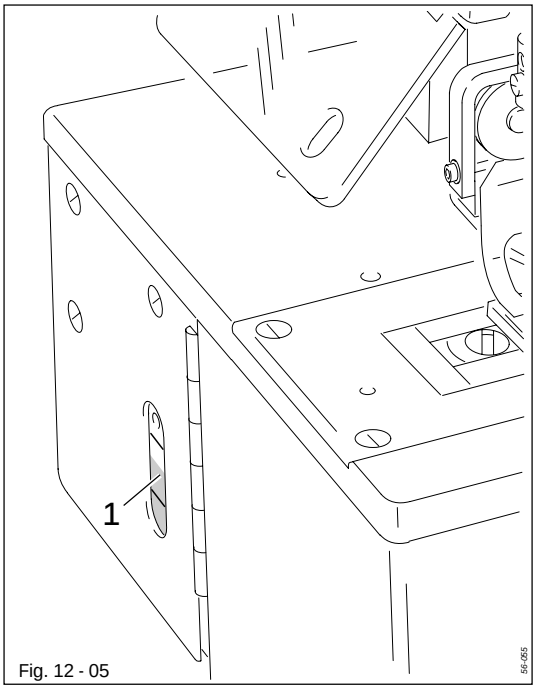

Fig. 12 - 05

The oil level in sight glass 1 must always be between the two markings.

- If necessary top up oil through hole 1 in the sight glass.

Only use oil with a medium viscosity of 10.00 mm²/s at 40ºC and a density of 0.847 g/cm³ at 15ºC.

We recommend PFAFF sewing machine oil,
part no.280-1-120 105.

13 Adjustment

Unless otherwise stipulated, the machine must be disconnected from the mains by switching it off at the on/off switch or by pulling out the mains plug, and the knife must be locked mechanically to prevent knife engagement.

13.01 Notes on adjustment

All following adjustments are based on a fully assembled machine and may only be carried out by expert staff trained for this purpose.
Machine covers, which have to be removed and replaced to carry out checks and adjustments, are not mentioned in the text.
The order of the following chapters corresponds to the most logical work sequence for machines which have to be completely adjusted. If only specific individual work steps are carried out, both the preceding and following chapters must be observed.
Screws, nuts indicated in brackets ( ) are fastenings for machine parts, which must be loosened before adjustment and tightened again afterwards.

13.02 Tools, gauges and other accessories

- 1 set of screwdrivers with blade widths from 2 to 10 mm
- 1 set of wrenches with jaw widths from 7 to 14 mm
- 1 set of Allan keys from 1.5 to 6 mm
- 1 offset screwdriver, Part no. 91-029 339-91
- 1 metal ruler, Part no. 08-880 218-00
- 1 screw clamp, Part no. 61-111 600-35/001
- 1 needle rise gauge 2.4 mm, Part No. 61-111 600-01
- 1 adjustment gauge, Part no. 61-111 635-86
- 1 adjustment gauge for lower knife stop, Part no. 61-111 635-85
- 1 adjustment gauge for upper knife stop, Part no. 61-111 635-93
- 1 adjustment pin, Part no. 61-111 641-46
- Needles (system 438), sewing thread and test materials

13.03 Abbreviations

t.d.c. = top dead centre

b.c.c. = bottom dead centre

13.04 Toothed belts of the hook drive unit

Requirement
There should be a hardly noticeable amount of play between the toothed belt wheels 3 and the toothed belt 4.

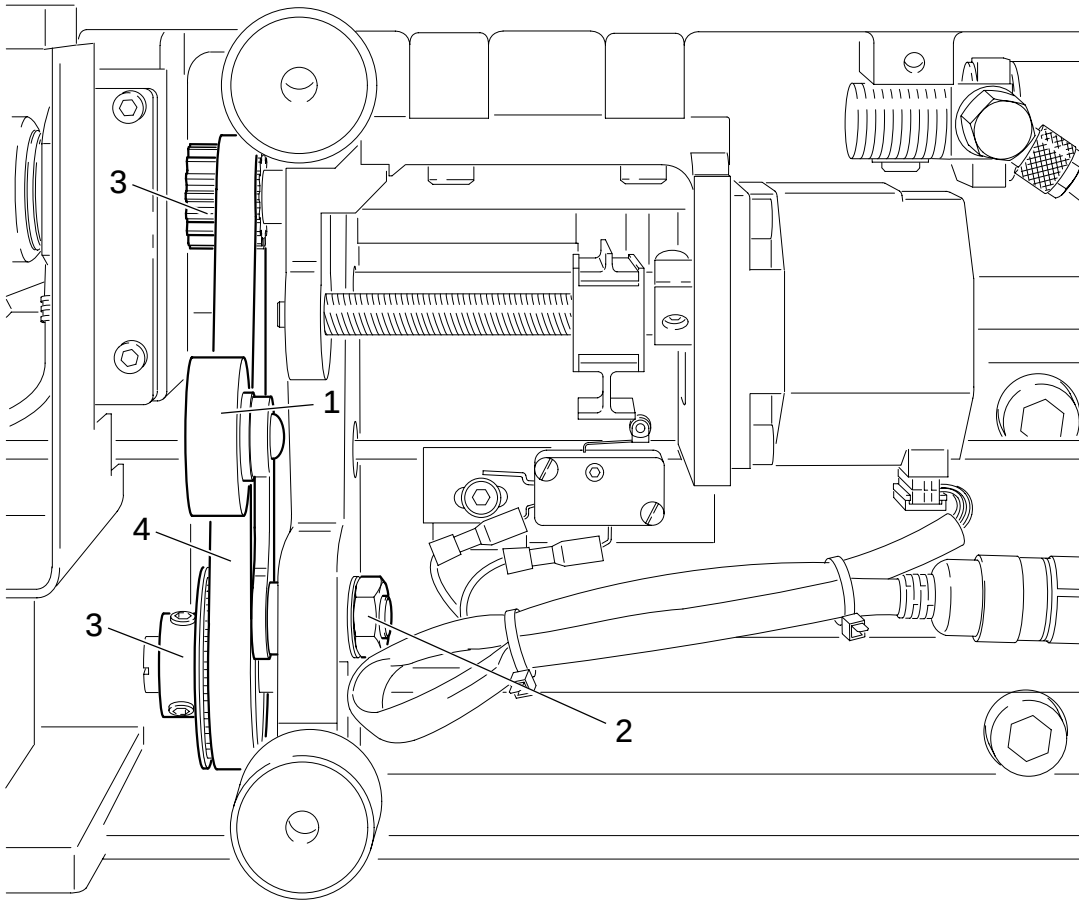

Fig. 13 - 01

- Loosen the machine's screw connection to the table.
- Tilt the machine backwards and dismount the pan.
- Adjust tensioner 1 (nut 2) according to the requirement.

If there are operational noises, repeat the adjustment.

13.05 Drive rods of the bobbin thread trimming device

Requirement
When cylinder **5** is fully extended, roller **3** should be positioned at a small distance (approx. **0.1** mm) from the curve bottom of slotted lever **4**.

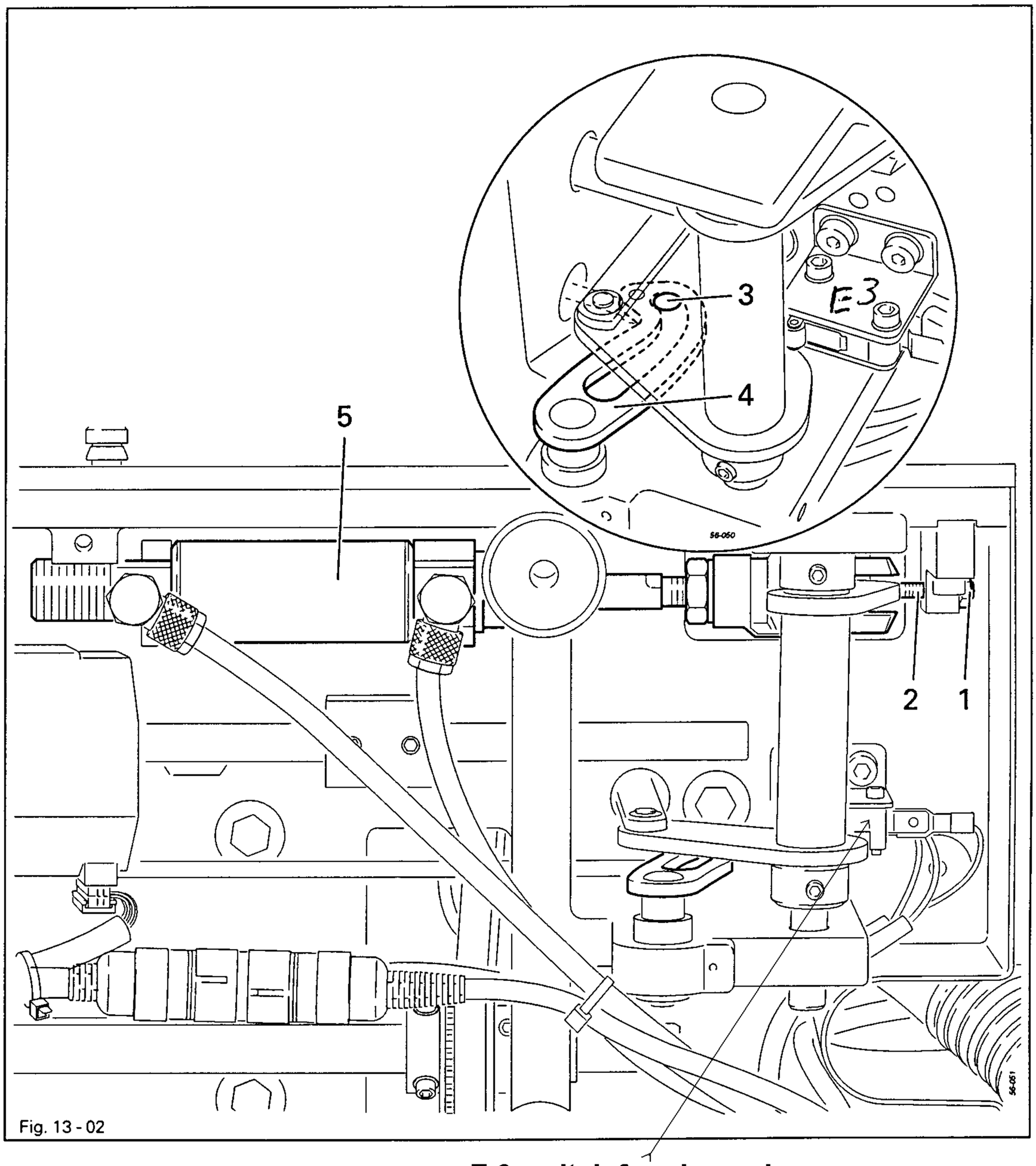

Fig. 13 - 02

E 3 switch for clamp down

- Loosen nut **1**.
- Loosen screw **2** until roller **3** can be pushed into the curve bottom of slotted lever **4** by hand.
- Well tighten screw **2**.
- To set the distance of roller **3** according to the **requirement**, turn screw **2** another ½ turn and fix it with nut **1**.

When the cylinder is extented, there should be a distance of 204.5 mm between the centre of the yoke head bore hole and the bore hole for the cylinder suspension.

13.06 **Switch for sewing start** **E 3** clamp moves to the down position, releasing switch E 3 for sewing start signal.

Requirement
When cylinder **5** is fully extended, switch **1** should be operated.

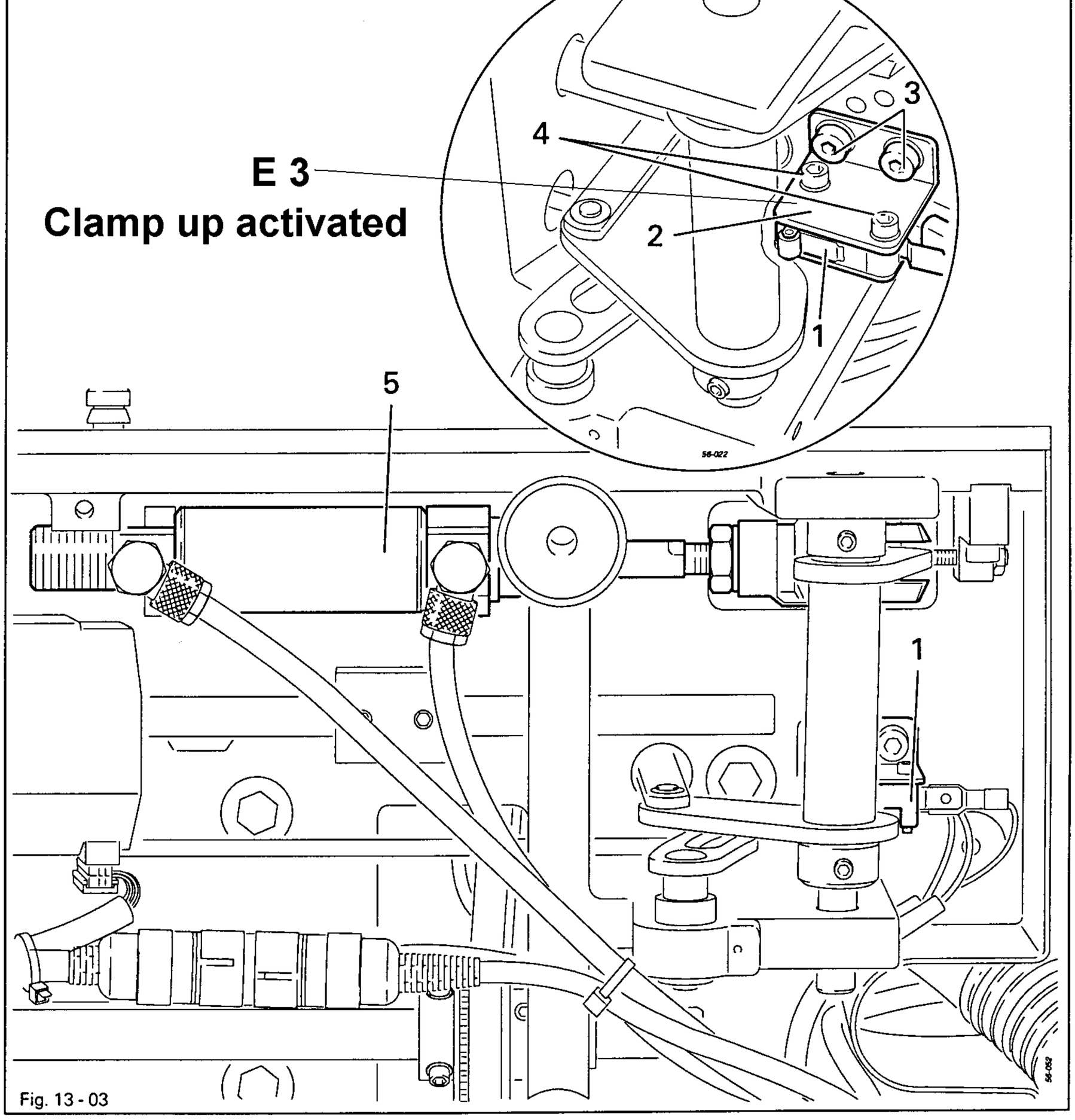

Fig. 13 - 03

- Adjust switch **1** or bracket **2** (screws **3** or **4**) according to the **requirement.**

13.07 Basic position of the feed drive unit

Requirement
Switch 2 should operate when slide block 4 is 1.6 mm away from clamp 5.

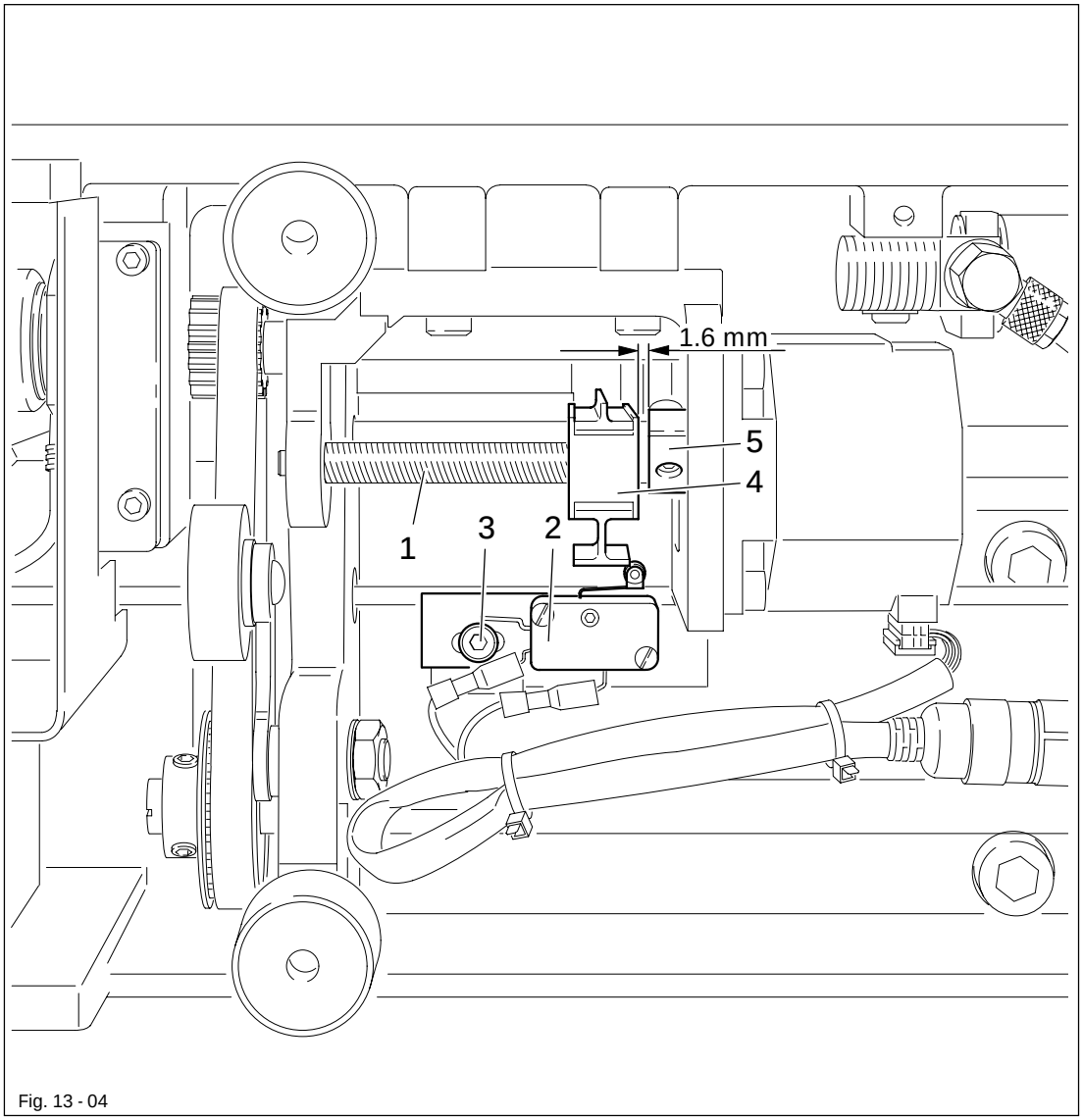

Fig. 13 - 04

- Set the distance of 1.6 mm by turning spindle 1.
- Adjust switch 2 (screw 3) according to the requirement.

13.08 Preliminary adjustment of the work clamp

Requirement

When the feed unit is in its basic position

1. The drive lever 1 should be flush with marking 8 on shaft 5,
2. The front edge of drive lever 1 should be flush with guide pin 4 and
3. Eccentric 6 should touch drive lever 1 without play.

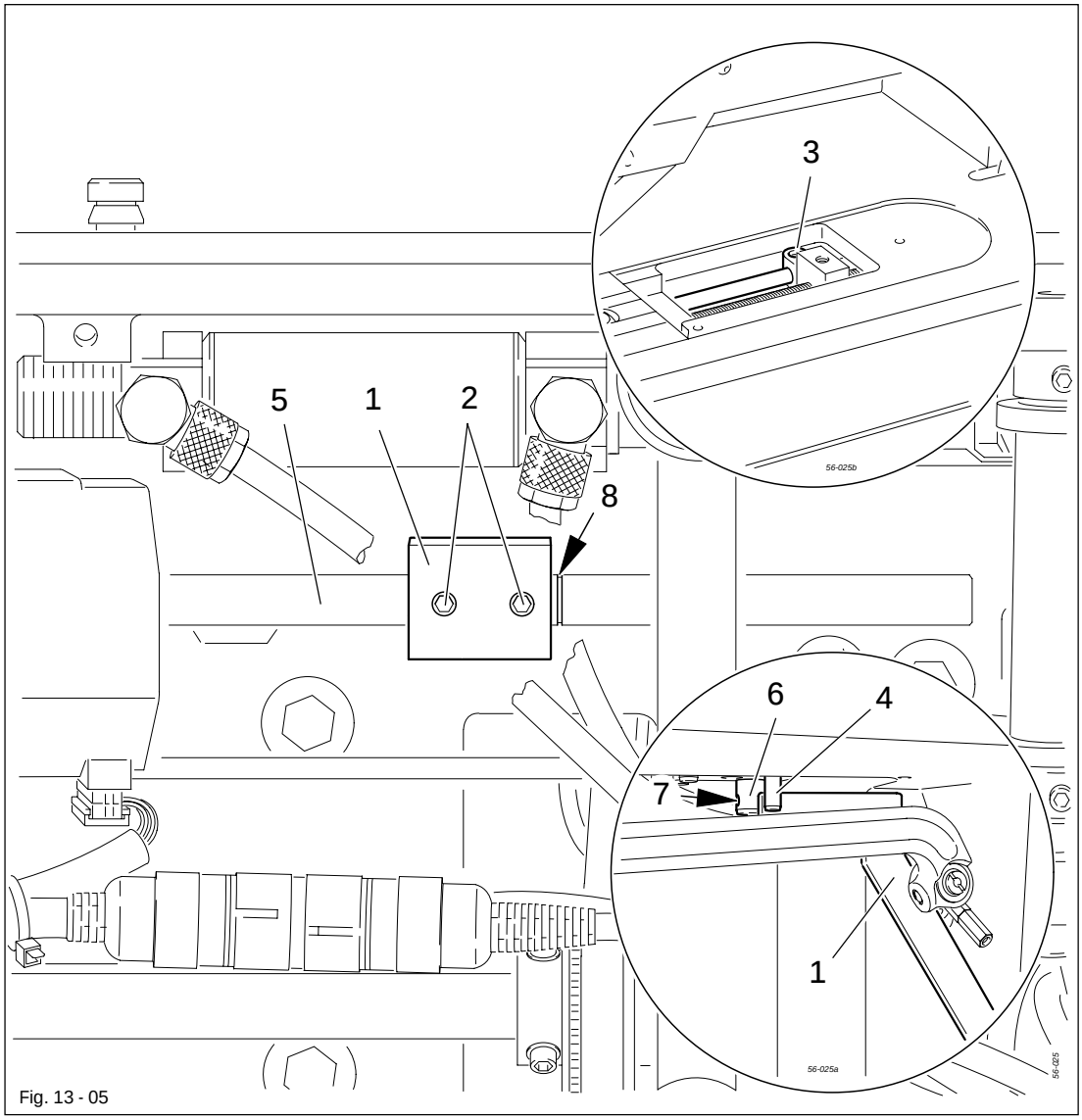

Fig. 13 - 05

- Adjust drive lever 1 (screws 2) according to requirement 1.
- Loosen screw 3.
- Bring drive lever 1 to stop on guide pin 4 and adjust shaft 5 according to requirement 2.
- Turn eccentric 6 (screw 7) according to requirement 3.
- Tighten screw 3.

13.09 Toothed belts of the main drive unit

Requirement

1. Toothed belt wheels 1 and 5 should be in alignment.
2. There should be a hardly noticeable amount of play between the toothed belt wheels 1 and 5 and the toothed belt 6.

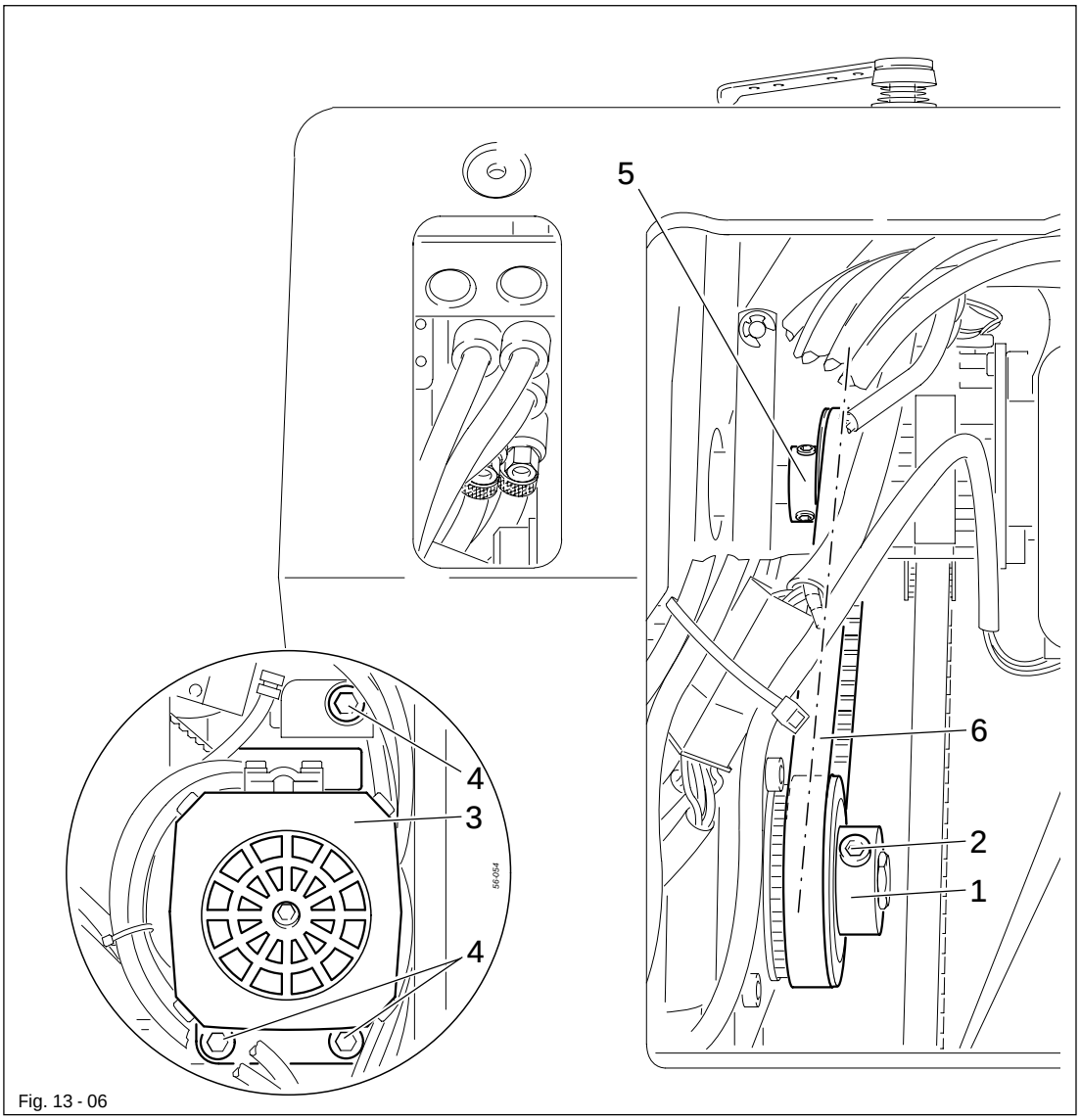

Fig. 13 - 06

- Adjust toothed belt wheel 1 (screws 2) according to requirement 1.
- Swing motor 3 (screws 4) according to requirement 2.

If there are operational noises, repeat the adjustments.

13.10 Preliminary adjustment of the needle height

For final setting of needle bar height, go to (13.14)

Requirement
When the needle bar is at b.d.c. there should be a distance of **11 mm** between the lower edge of the needle bar **1** and the needle plate.

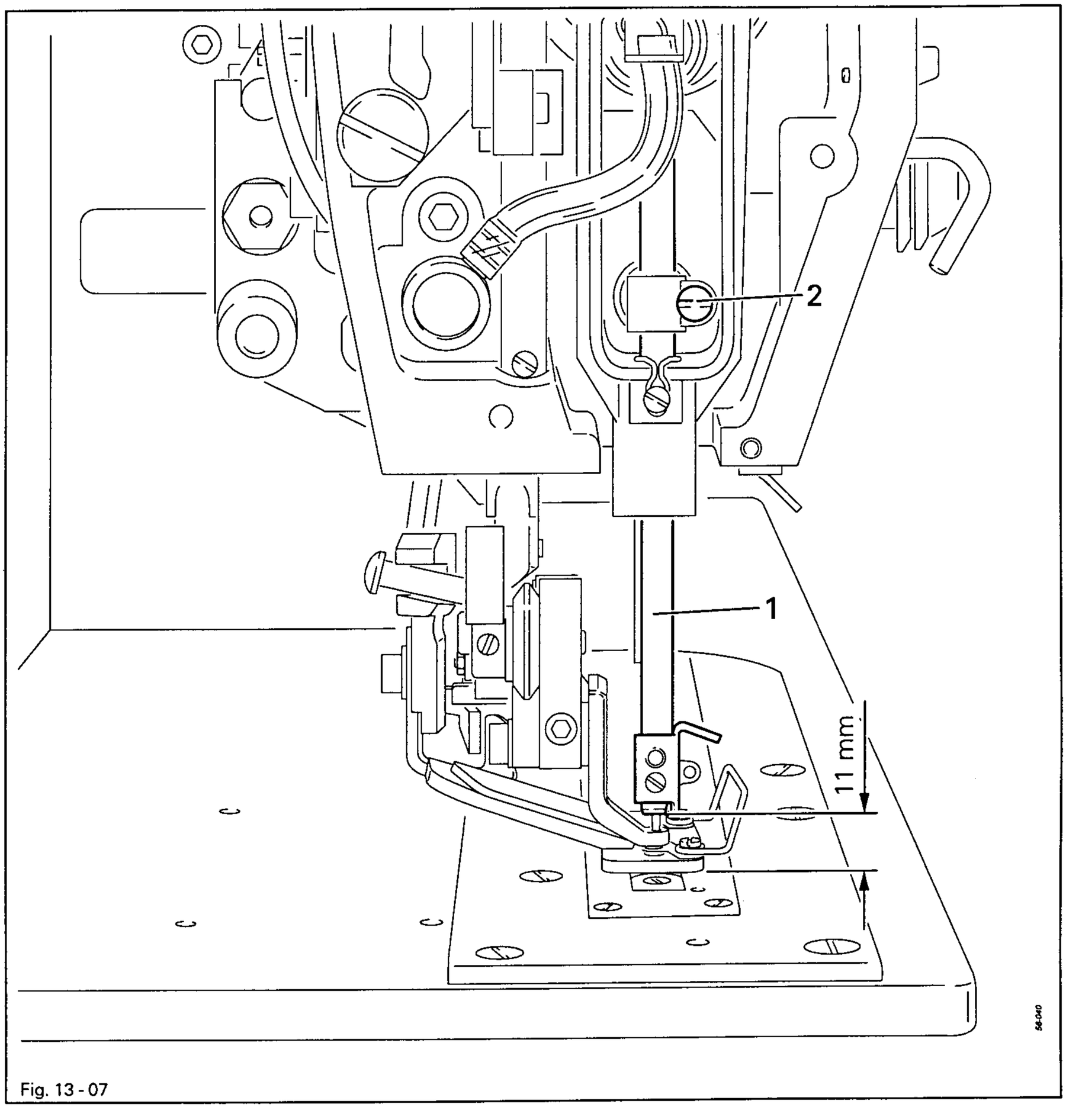

Fig. 13 - 07

- Adjust needle bar **1** (screw **2**) according to the **requirement.**

13.11 Position of the needle plate in relation to the needle

Requirement
Needle plate base 3 should rest on the edge of the bed-plate cutout (see arrows). Seen in the direction of sewing the needle should enter the needle hole in the centre.

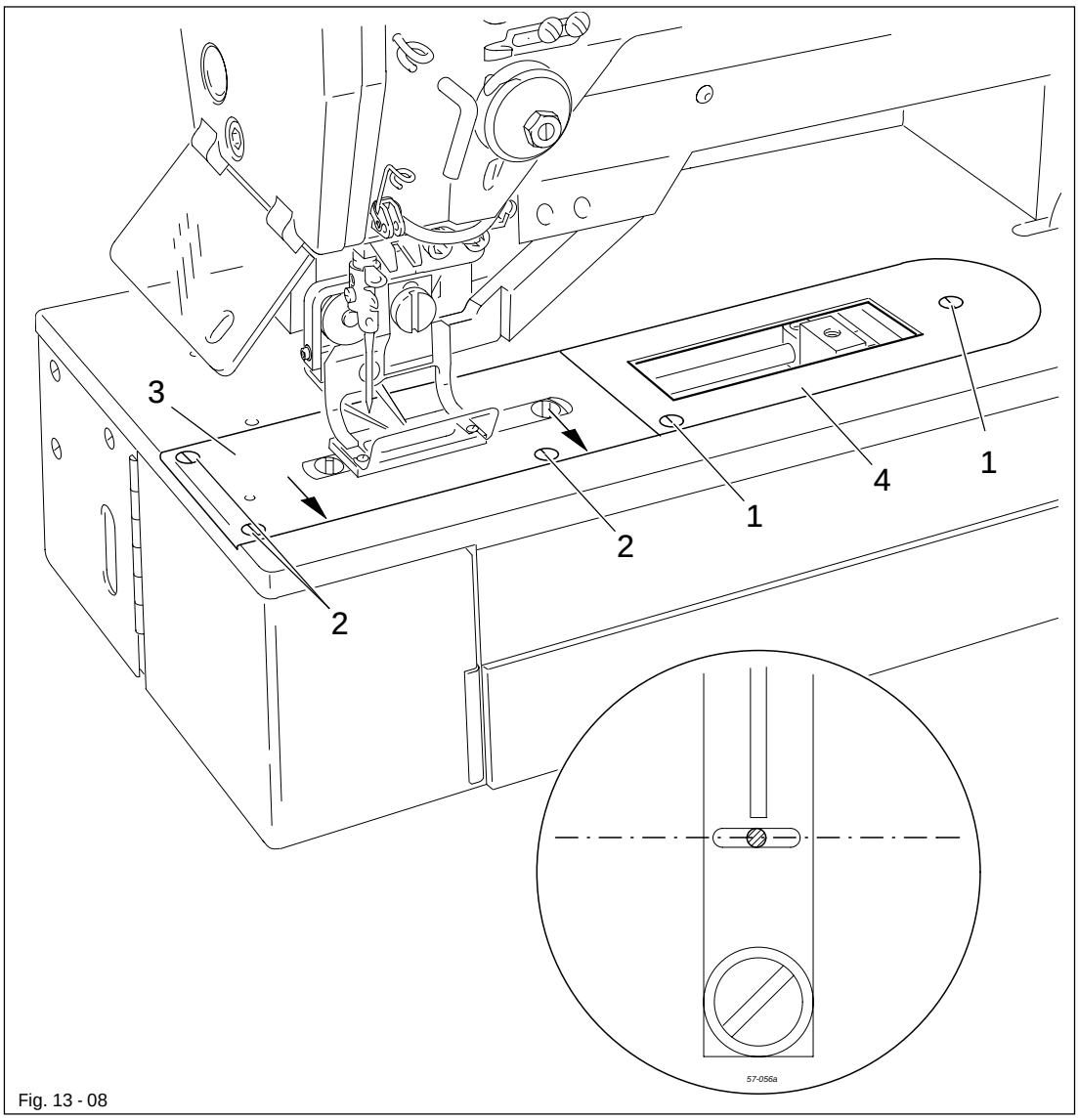

Fig. 13 - 08

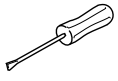

- Dismount feeder and insert a new needle.
- Loosen screws 1 and 2.
- Adjust needle plate base 3 according to the requirements.
- Tighten screws 2.
- Bring stop plate 4 into contact with needle plate base 3 and tighten screws 1.

13.12 Sensor board of the needle drive (in dismantled state)

Requirement
After the machine has been switched on, the drill hole in lug **1** must match the marked hole on the support stand.

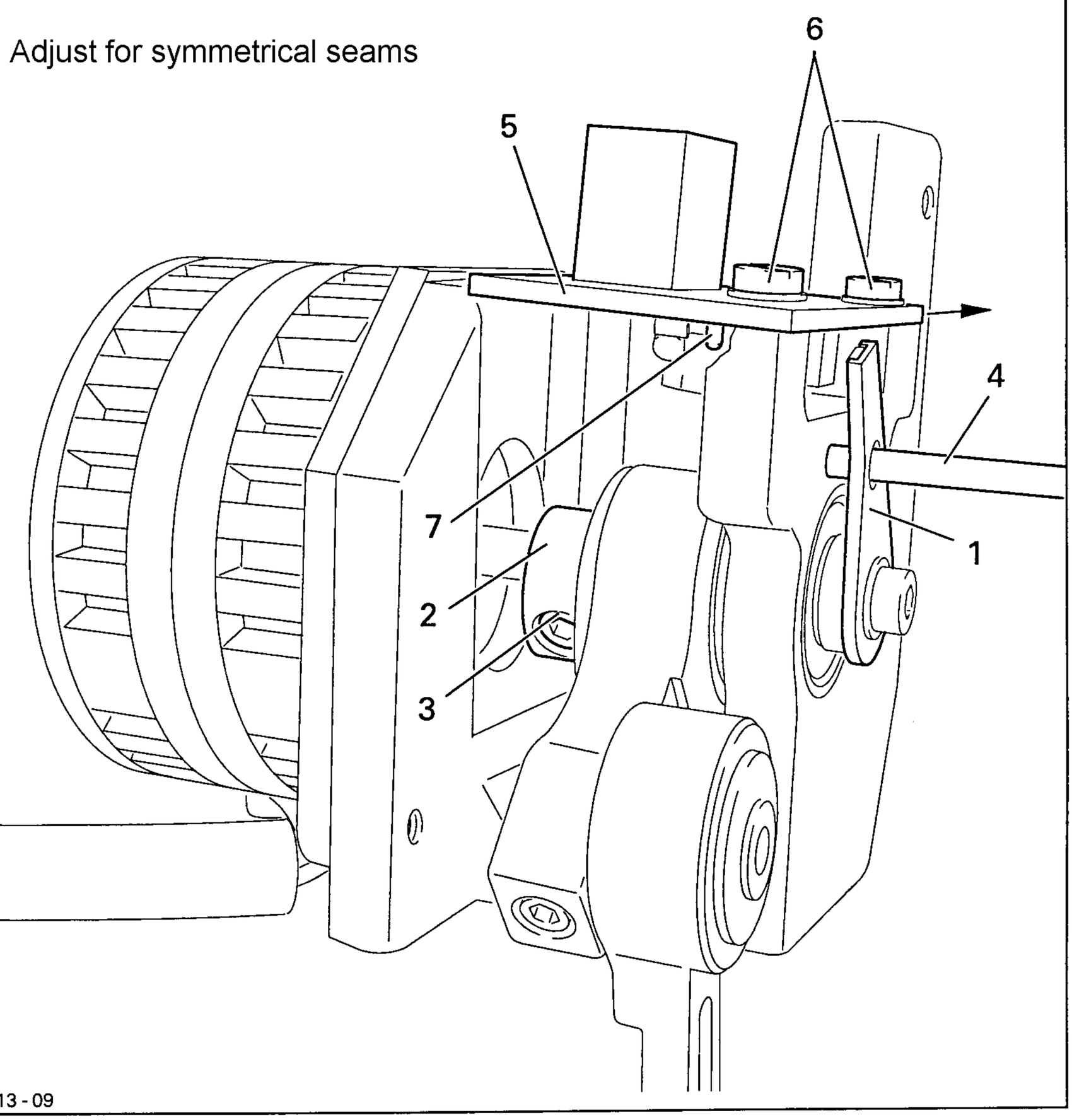

Fig. 13 - 09

To replace the sensor board, it is imperative to pay attention to the following work steps!

Electric voltage!
Danger of an electric shock if handled incorrectly!

- Completely remove the needle drive unit (plugs remain connected).
- Check whether lug **1** is opposite the marking on eccentric **2**.
- Loosen screws **3**.
- With adjustment pin **4** (Order no. 61-111 641-46) insert lug **1** in the marked hole of the

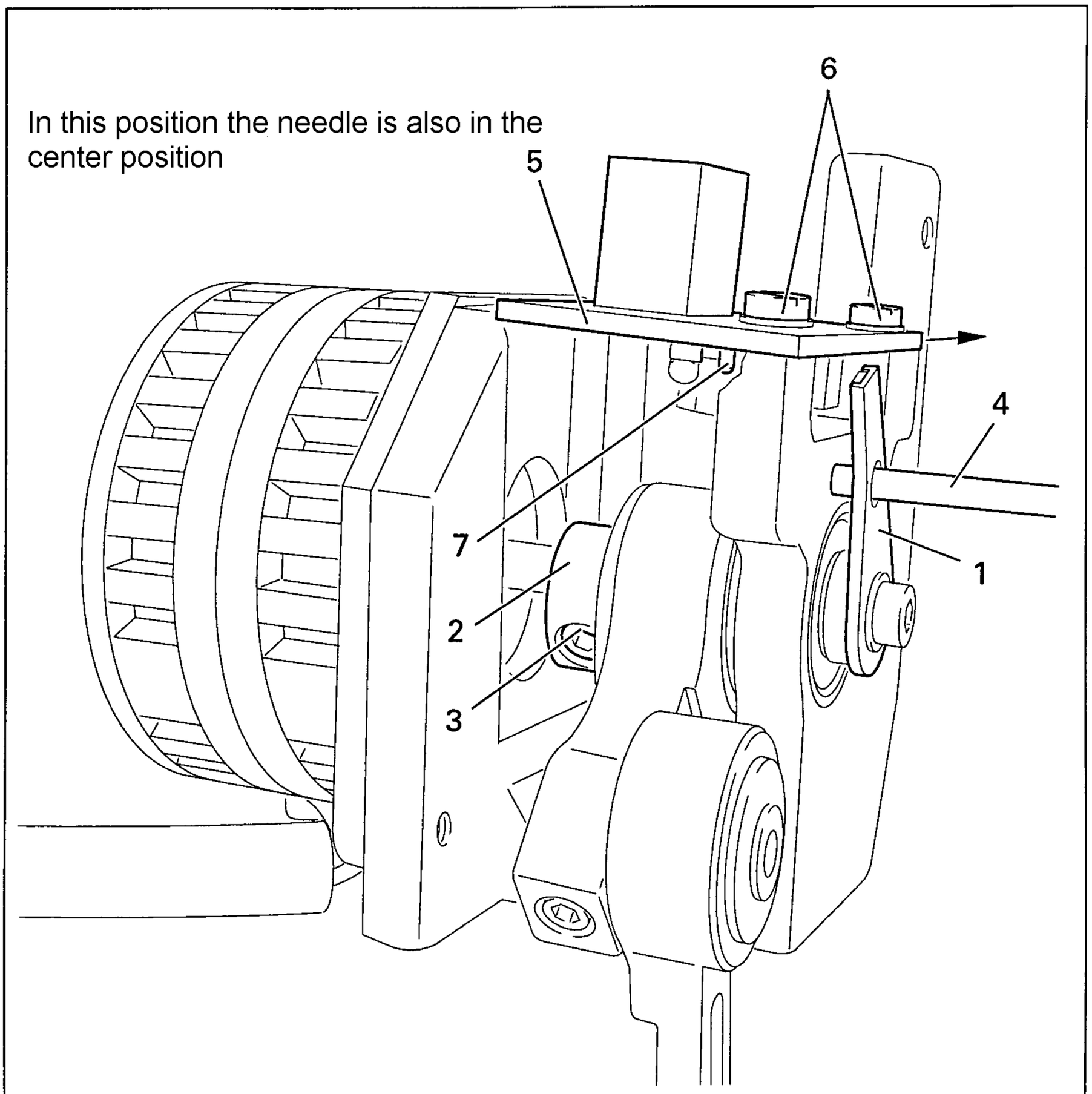

Fig. 13 - 09

support stand.

- Switch on the machine and wait until the stepping motor stands still.
  (Ignore error message "Error 10").
- Move the sensor board **5** (screws **6**) in the direction of the arrow, until LED **7** lights up and push it back again until LED **7** has just extinguished.
- Switch off the machine.
- Tighten screws **3** and switch off the machine.
- Remove adjustment pin **4**.
- Switch on the machine and check the needle drive unit according to the **requirement.**
- Switch off the machine.
- Install the needle drive unit and adjust it as described in **Chapter 13.13 Basic setting of the needle drive unit.**

13.13 Basic setting of the needle drive unit

Requirement
When the needle point enters fabric and lug **1** is blocked, the needle should be in the centre of the needle hole as seen crosswise to the direction of sewing.

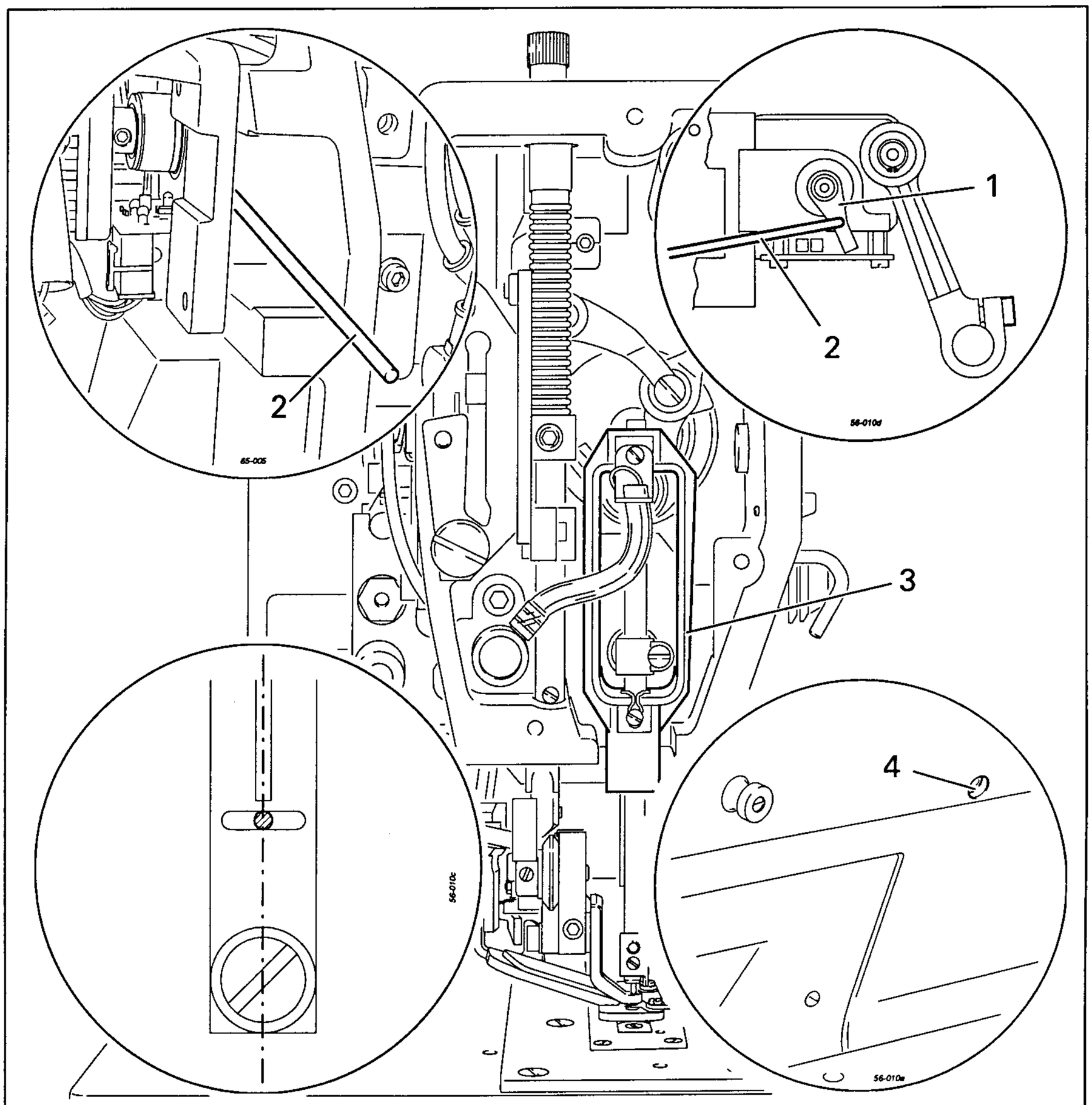

Fig. 13 - 10

- Bring the needle bar to b.d.c.
- Block lug **1** (adjustment pin **2**, part no. 61-111 641-46).
- Adjust the needle bar **3** (screw **4**) according to the **requirement.**
- Remove adjustment pin **2**.

See note in back of manual

13.14 Basic position of the work clamp (lengthwise to the arm)

Requirement
When the clamp 1 is in its basic position, it should be a 5 mm away from the centre of the needle hole.

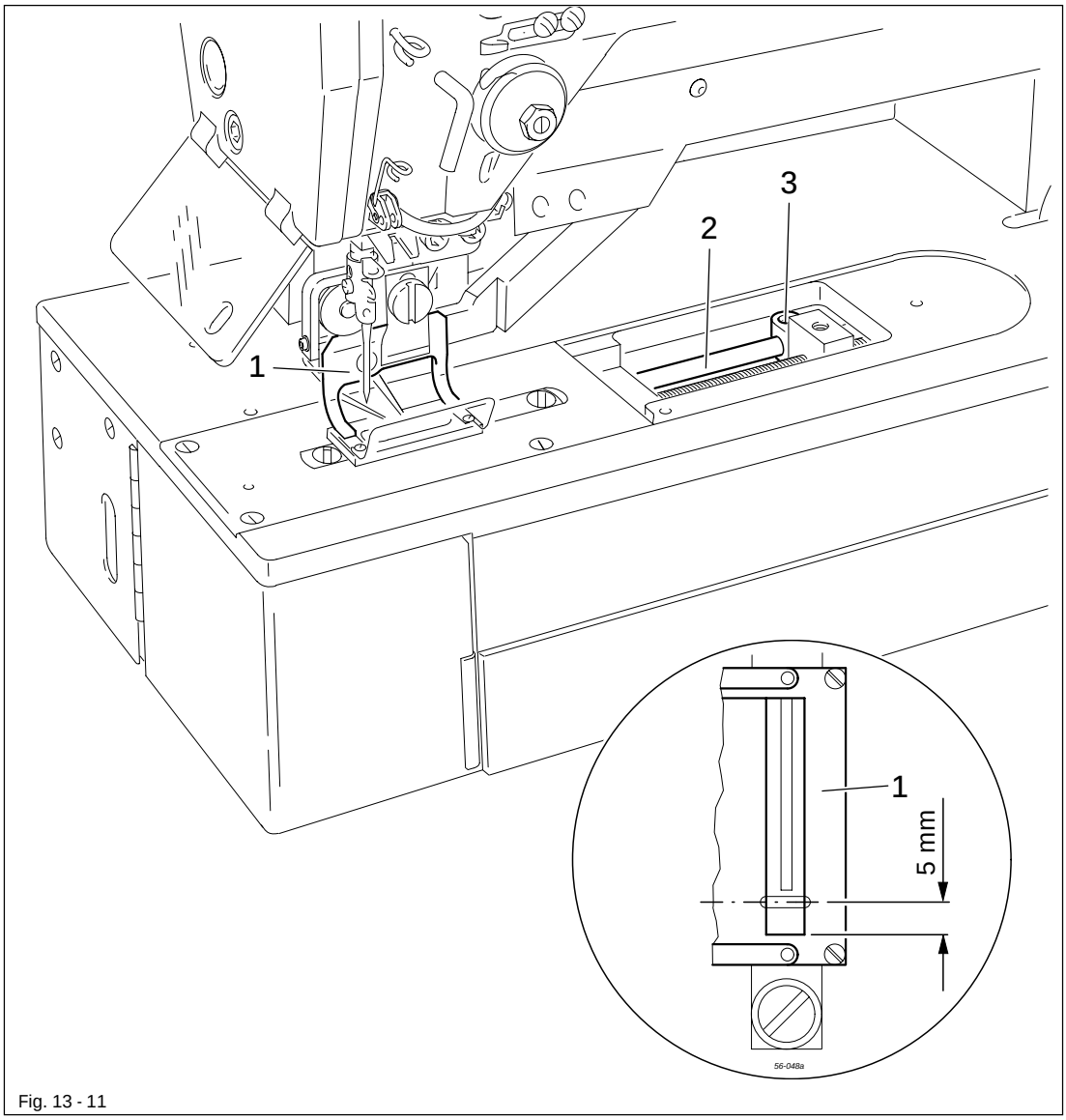

Fig. 13 - 11

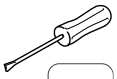

- Connect the compressed air system and switch on the machine.

- Lower the work clamp 1 (control panel).
- Adjust bar 2 (screw 3) according to the requirement.
- Switch off the machine and disconnect the compressed air.

13.15 Basic position of the work clamp (crosswise to the arm)

Requirement

1. When the pressure roller 1 is in guide unit 5, the cut-out of work clamp 6 should be in the centre of the needle hole.
2. When the work clamp 6 is in motion, it should always be parallel to the needle plate insert.

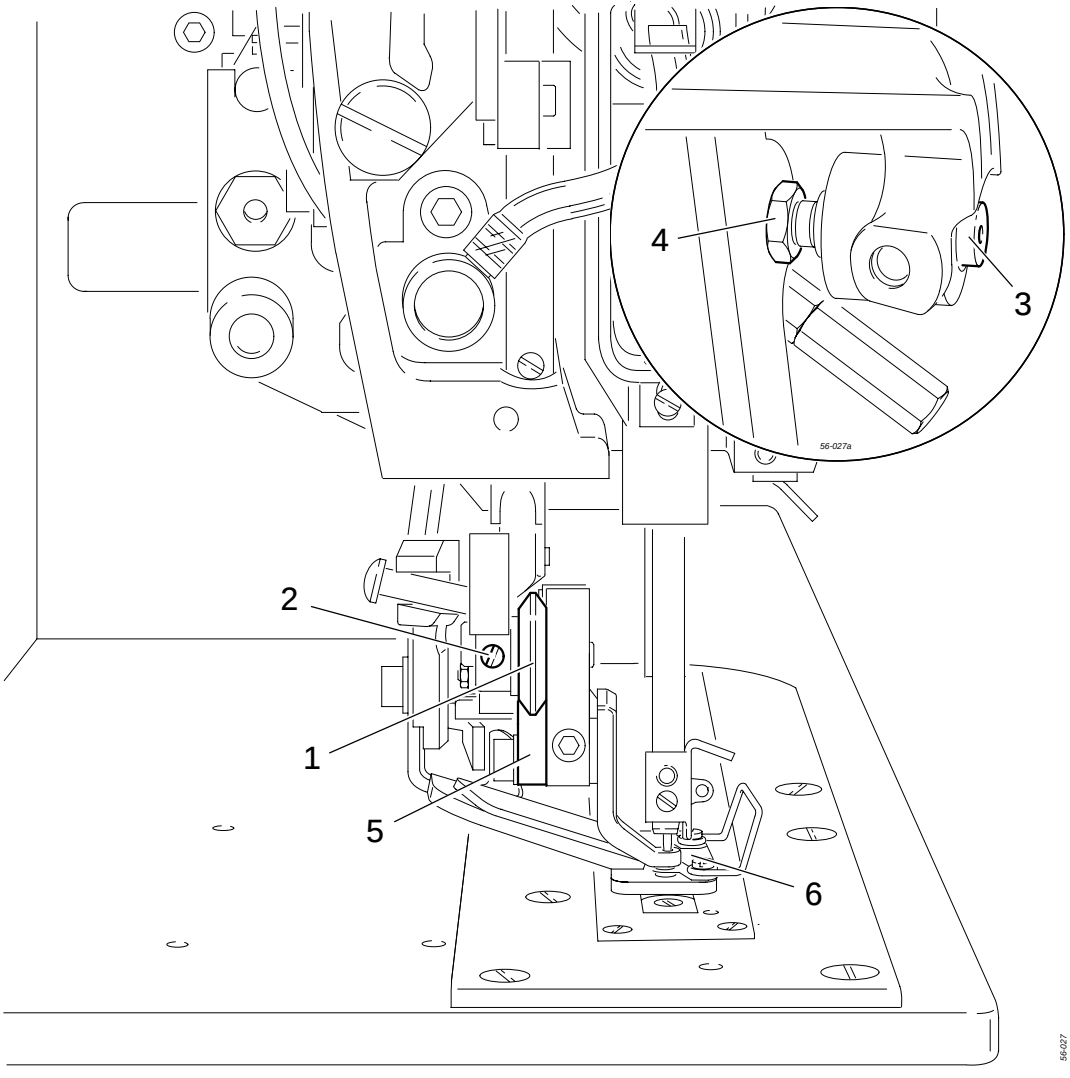

Fig. 13 - 12

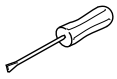

- Reduce the sewing pressure completely, see Chapter 9.08 Adjusting the work clamp pressure.
- Adjust pressure roller 1 (screw 2) according to requirement 1.
- Adjust bolt 3 (nut 4) according to requirement 2.

13.16 Upper take-up lever position (reference position)

Requirement
The take-up lever should position 1.8 – 2.0 mm before its t.d.c. and one of the screws 1 should be accessible.

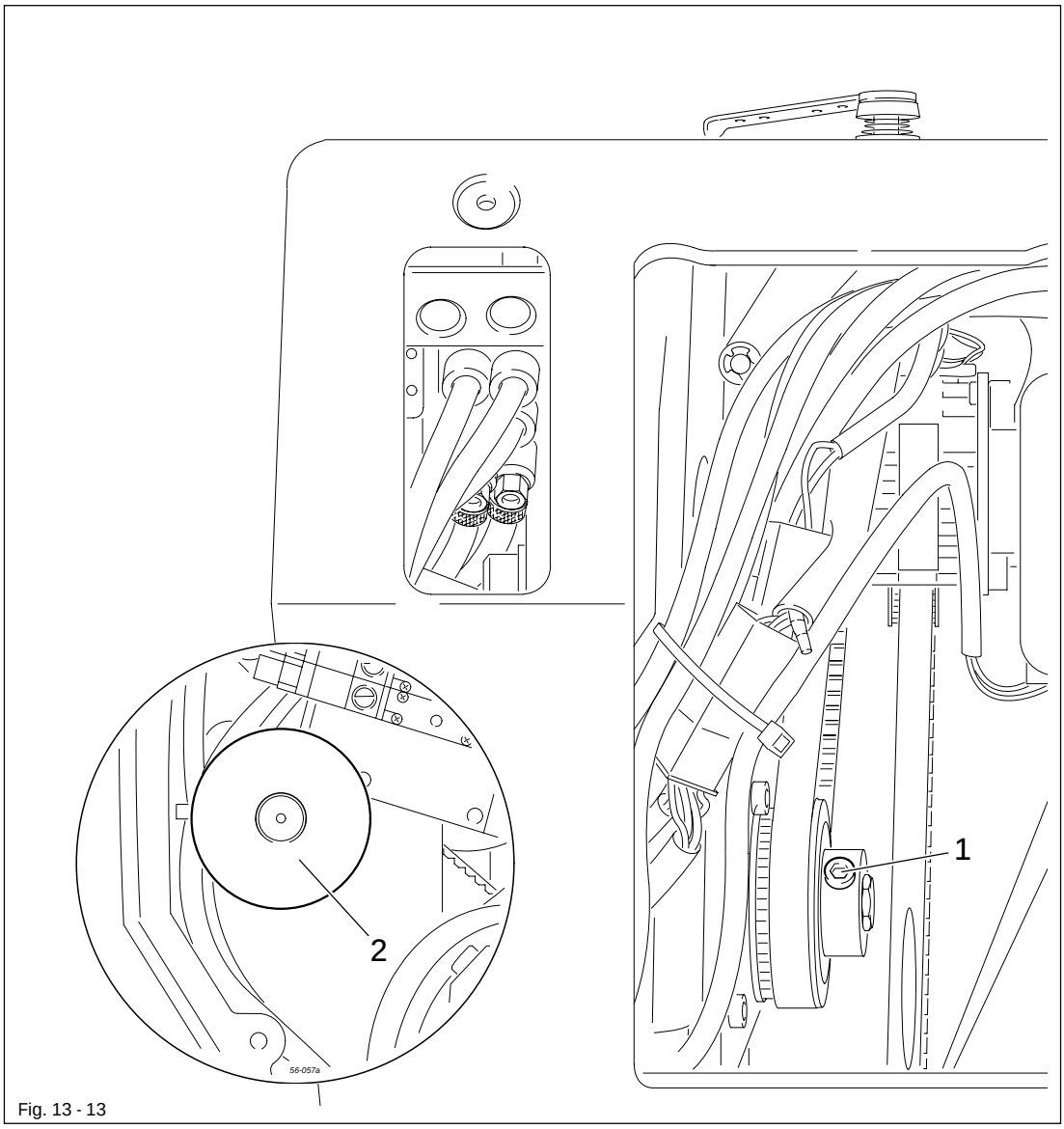

Fig. 13 - 13

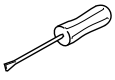

- Remove the needle and switch on the machine.
- Select parameter "609".

Enter

- Press Enter, the motor turns to the reference point.

- Loosen screw 1 and, by turning the balance wheel 2, bring the take-up lever into position according to the requirement.
- Tighten screws 1.
- Switch off the machine.

13.17 Lifting elbow on the work clamp

Requirement

1. The lifting elbow 1 should be parallel to pressure roller 3.
2. When work clamp 4 is lifted, there should be a slight amount of play between pressure roller 3 and lifting elbow 1.

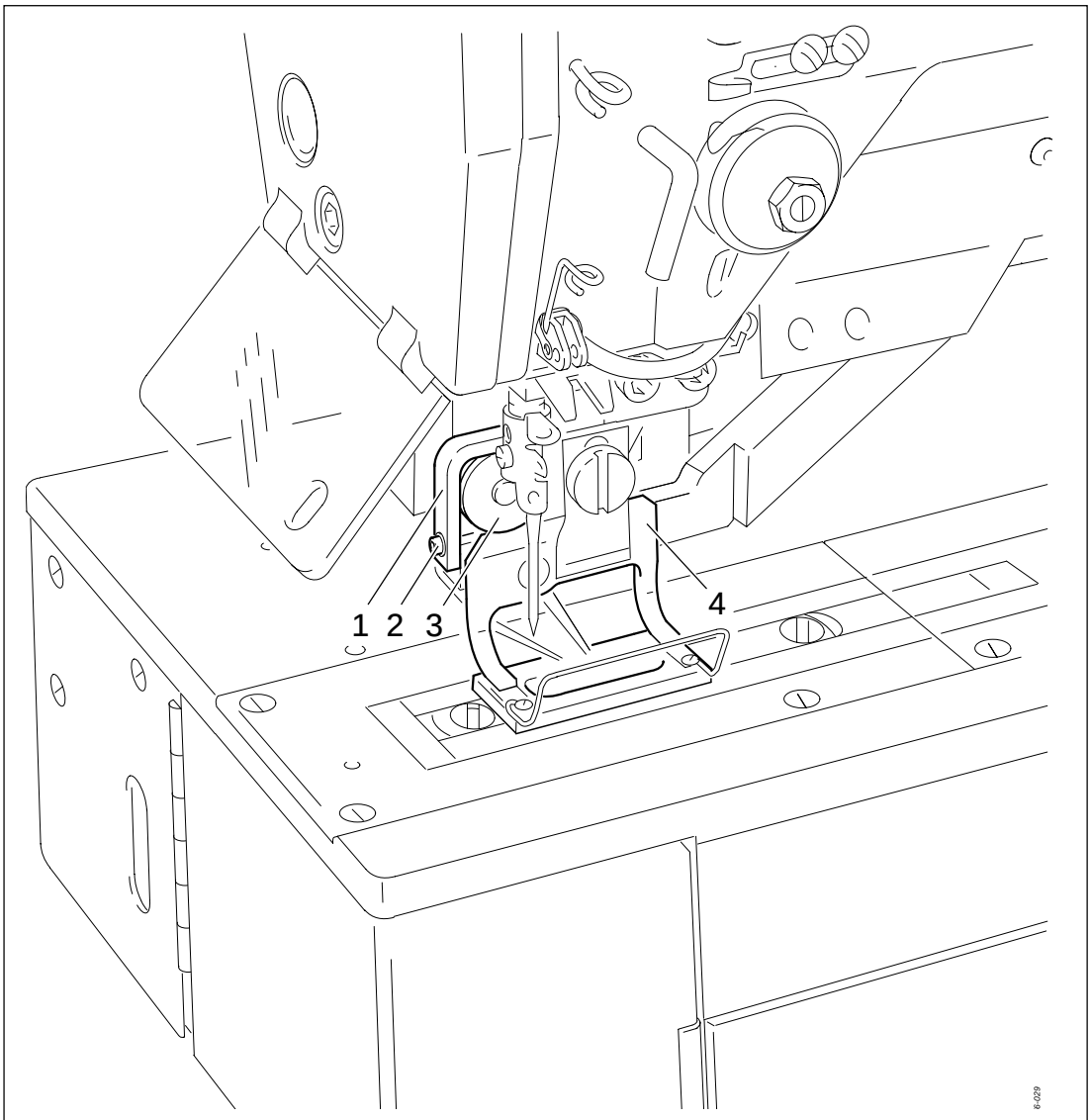

Fig. 13 - 14

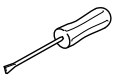

- Switch on the machine.

- Lower the work clamp.
- Adjust the lifting elbow 1 (screw 2) according to the requirements.
- Switch off the machine.

13.18 Work clamp stroke

Requirement
When the lifting cylinder is completely extended, there should be a space of 15 mm between lifting piece 4 and clamp 1.

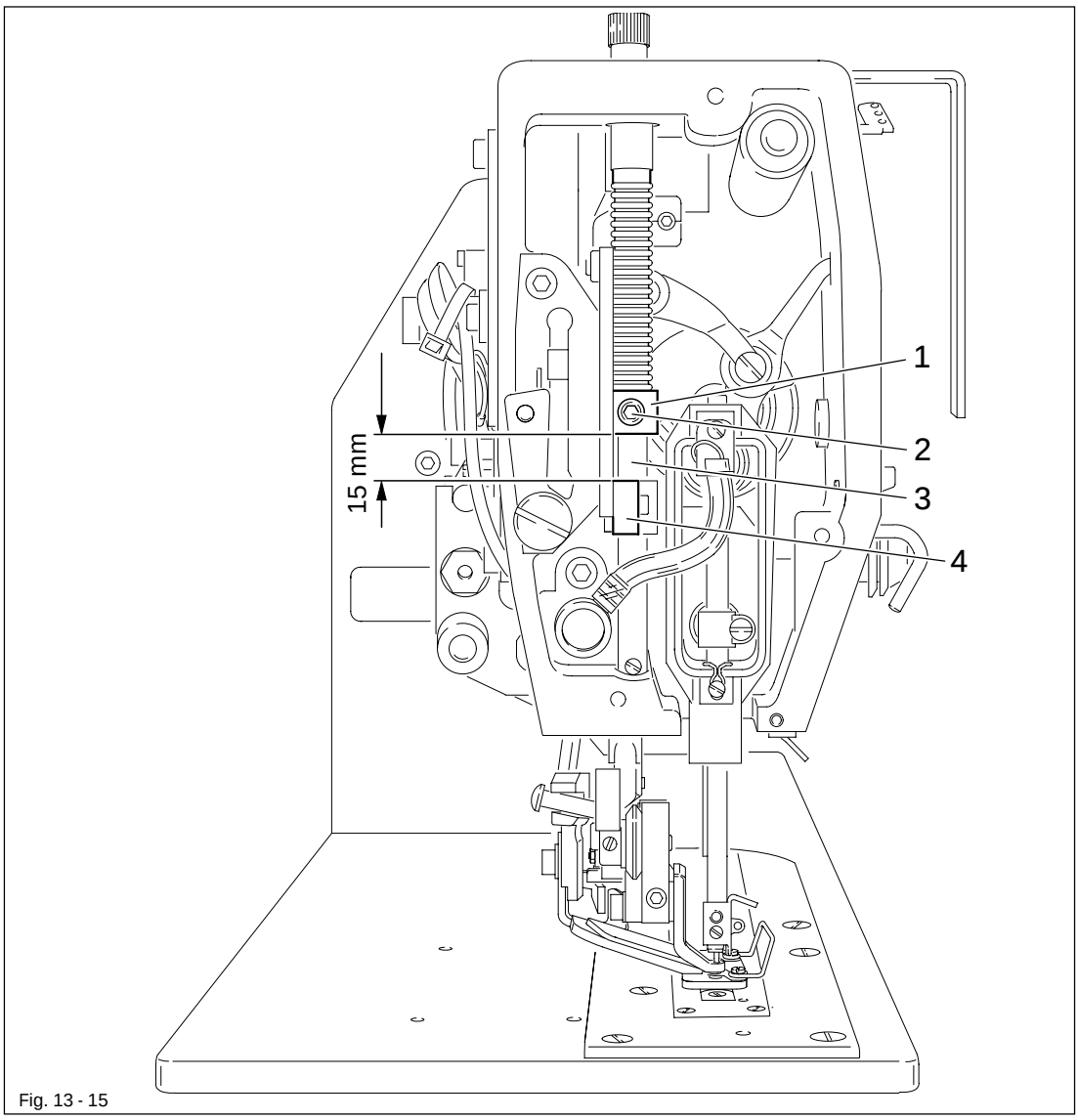

Fig. 13 - 15

- Reduce the work clamp pressure completely, see Chapter 9.08 Adjusting the work clamp pressure.
- Adjust clamp 1 (screw 2) according to the requirement.

Take care not to twist bar 3 during the adjustment!

13.19 Lifting cylinder of the work clamp

Requirement
The lifting and dropping motion of the work clamp should be carried out as quickly as possible.

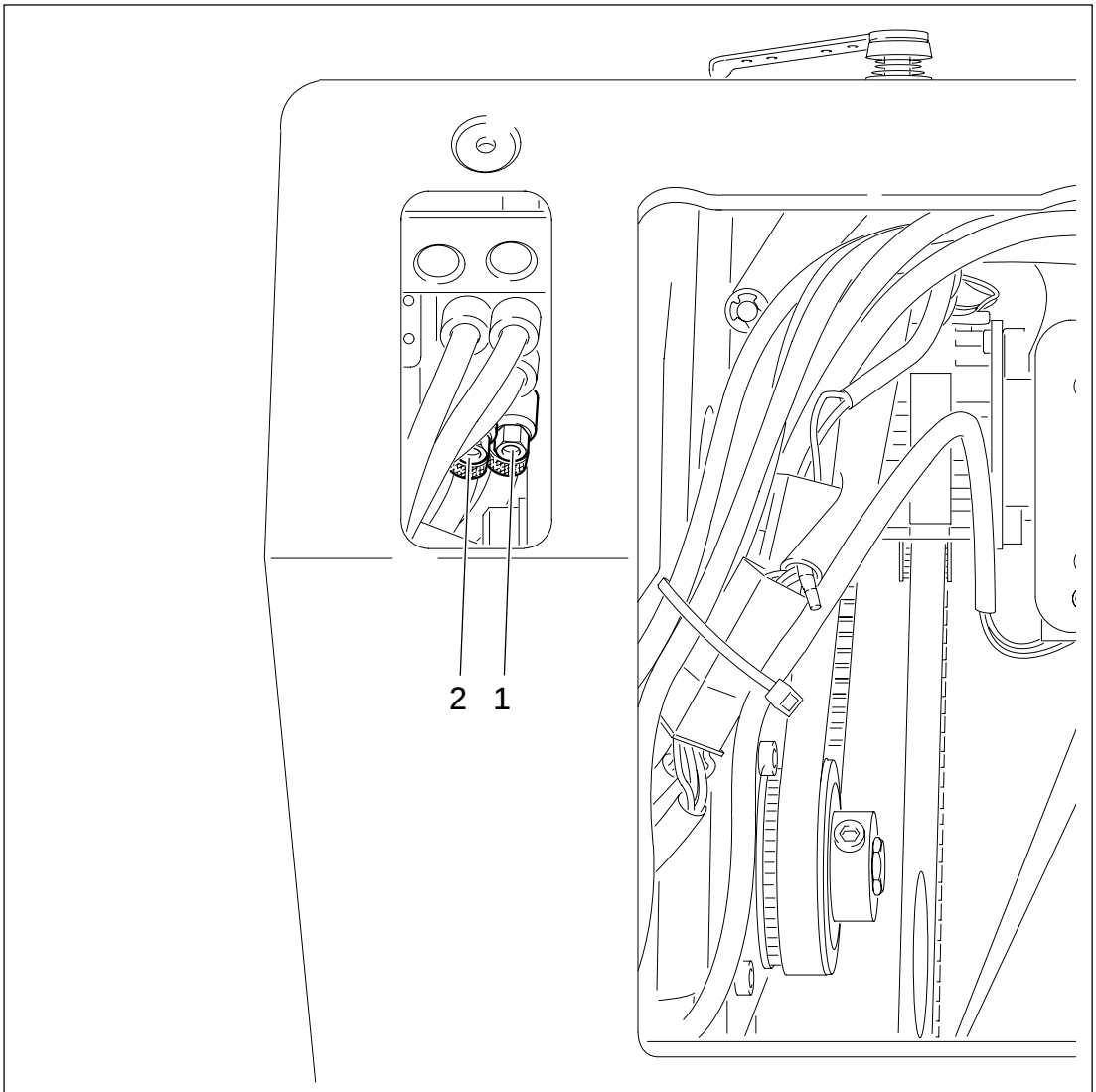

Fig. 13 - 16

- Adjust the throttles 1 (dropping motion) and 2 (lifting motion) according to the requirement.

13.20 Cutting pressure of the knife unit (in dismantled state)

Requirement

1. In its basic position (retracted), the knife cylinder 1 should have a length of 98.5 mm.
2. The knife 5 should cut perfectly, but the pressure on knife 5 should be as low as possible.

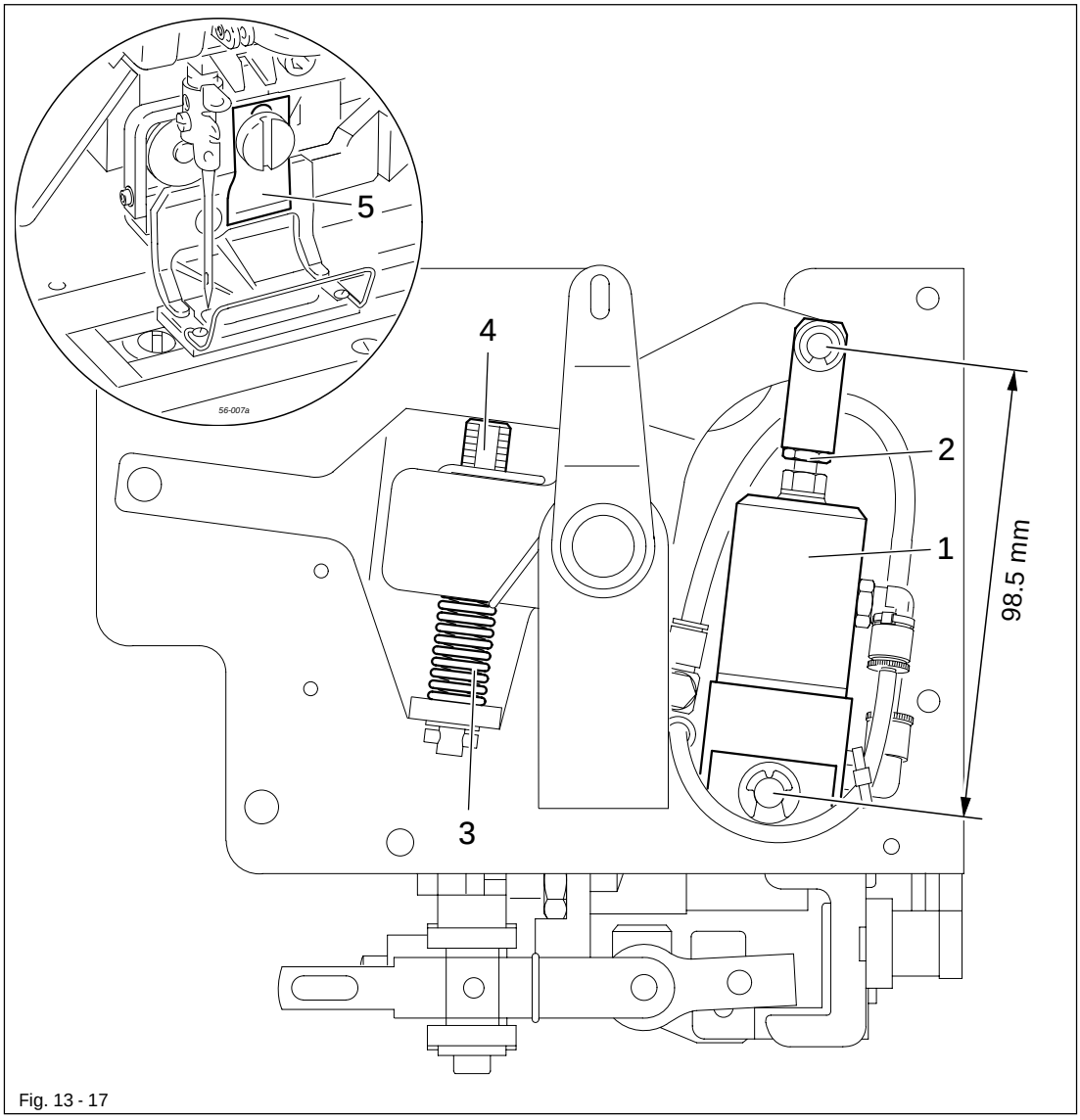

Fig. 13 - 17

- Adjust knife cylinder 1 (nut 2) according to requirement 1.
- To begin with, by turning screw 4 completely compress spring assembly 3, and then wind screw 4 back by three turns (requirement 2).

13.21 Position of the knife bracket and lower knife stop

Requirement

1. Knife bracket 5 should be adjusted so that adjustment gauge 2 is parallel to and
2. in the centre of the knife slot in the needle plate insert.
3. When the knife cylinder is extended, screw 4 should be accessible through the hole in the machine case and adjustment gauge 2 should be touching the needle plate insert.

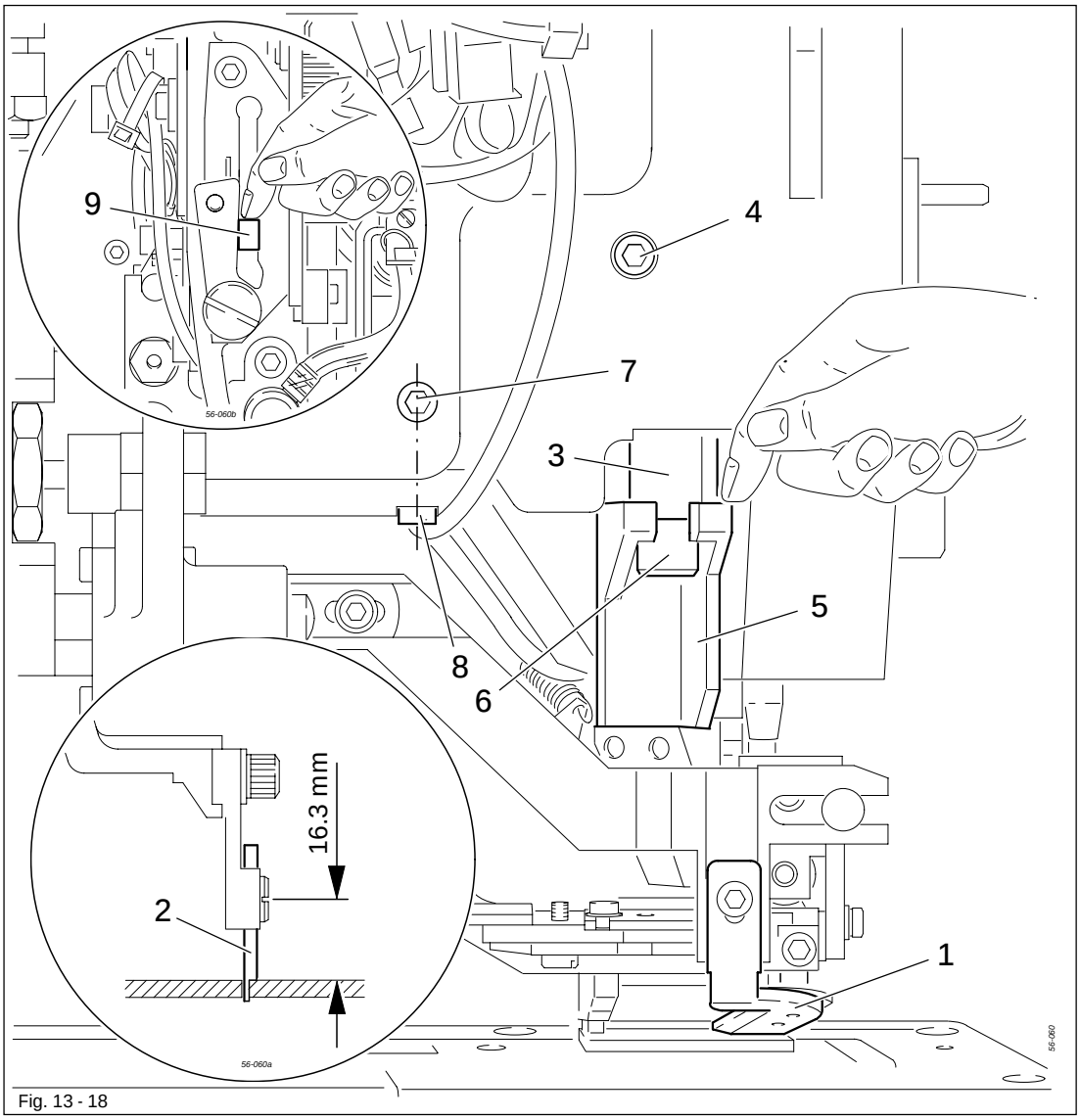

Fig. 13 - 18

- Bring the machine into its basic position and disengage needle thread cutter 1.
- Fit adjustment gauge 2 (Part no. 61-111 635-85).
- Twist knife bar 3 (screw 4) according to requirement 1.
- Adjust knife bracket 5 (screw 6) according to requirement 2.
- Loosen screw 7 and turn stop screw 8 back a few turns.
- Push down guide unit 9 by hand, until screw 4 becomes accessible through the hole in the machine case, and adjust knife bar 3 (screw 4) according to requirement 3.

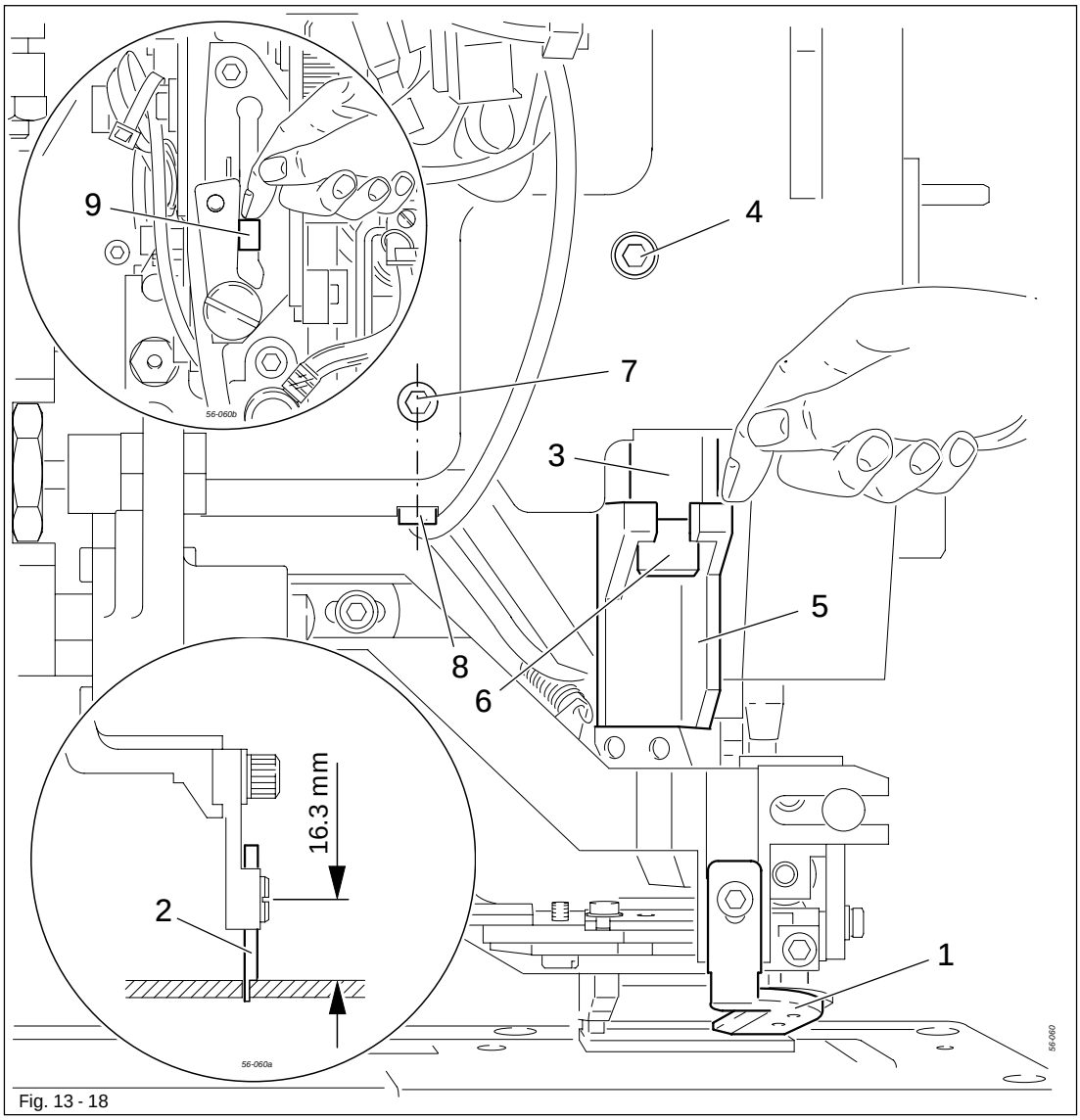

Fig. 13 - 18

- Push down knife bar 3 by hand (the adjustment gauge 2 must be touching the needle plate insert) and turn stop screw 8 until it touches the knife arm.
- Tighten screw 7 and remove adjustment gauge 2.

13.22 Upper knife stop

Requirement
When the adjustment gauge 1 is resting on the needle plate insert, the arm of the knife should be touching the upper knife stop.

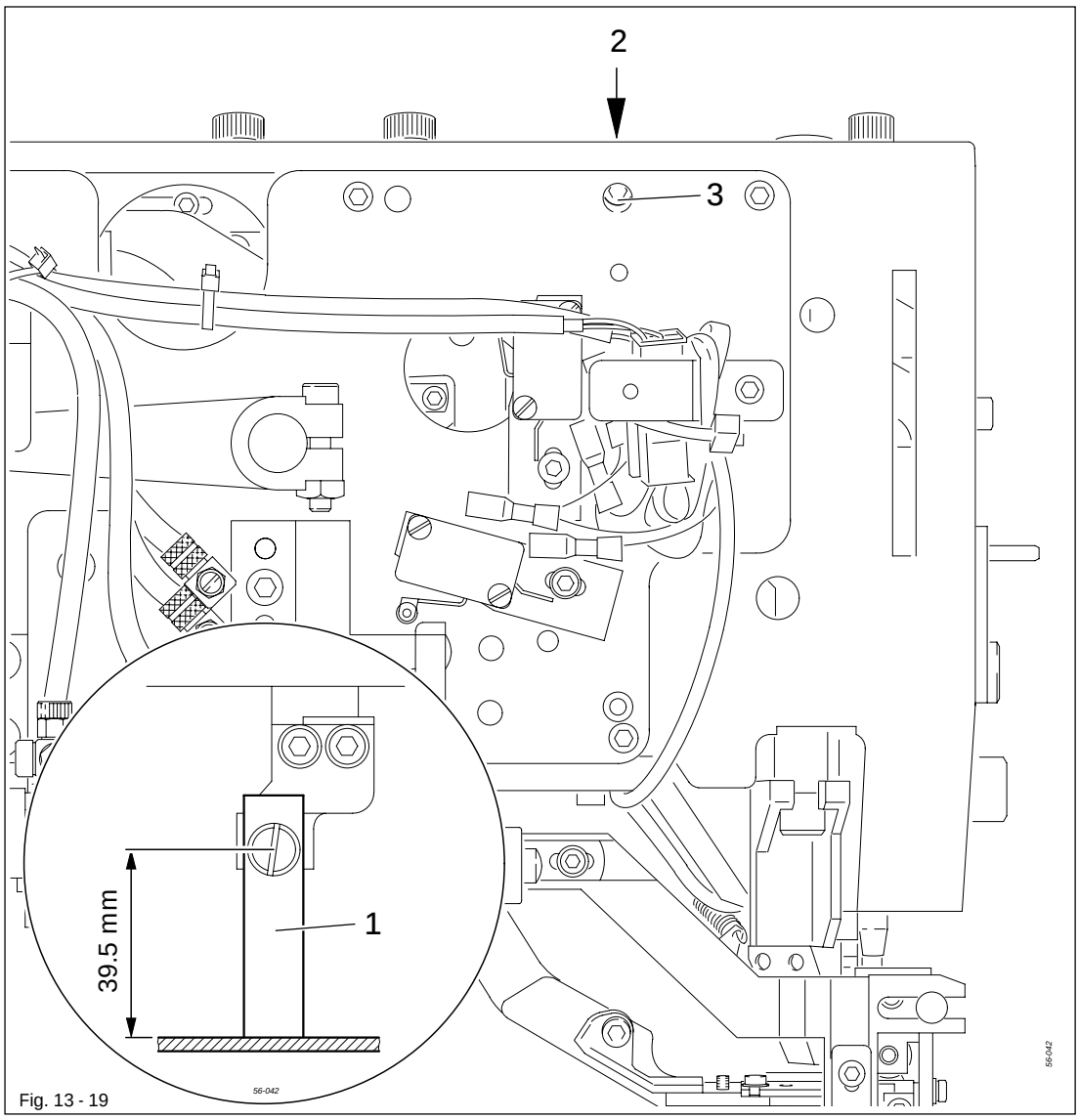

Fig. 13 - 19

- Fit adjustment gauge 1 (Part no. 61-11 635-93).
- Turn stop screw 2 (screw 3) according to the requirement.
- Remove adjustment gauge 1.

13.23 Knife control switch

Requirement
When the cutting device is in its neutral position, switch 1 should be reliably activated.

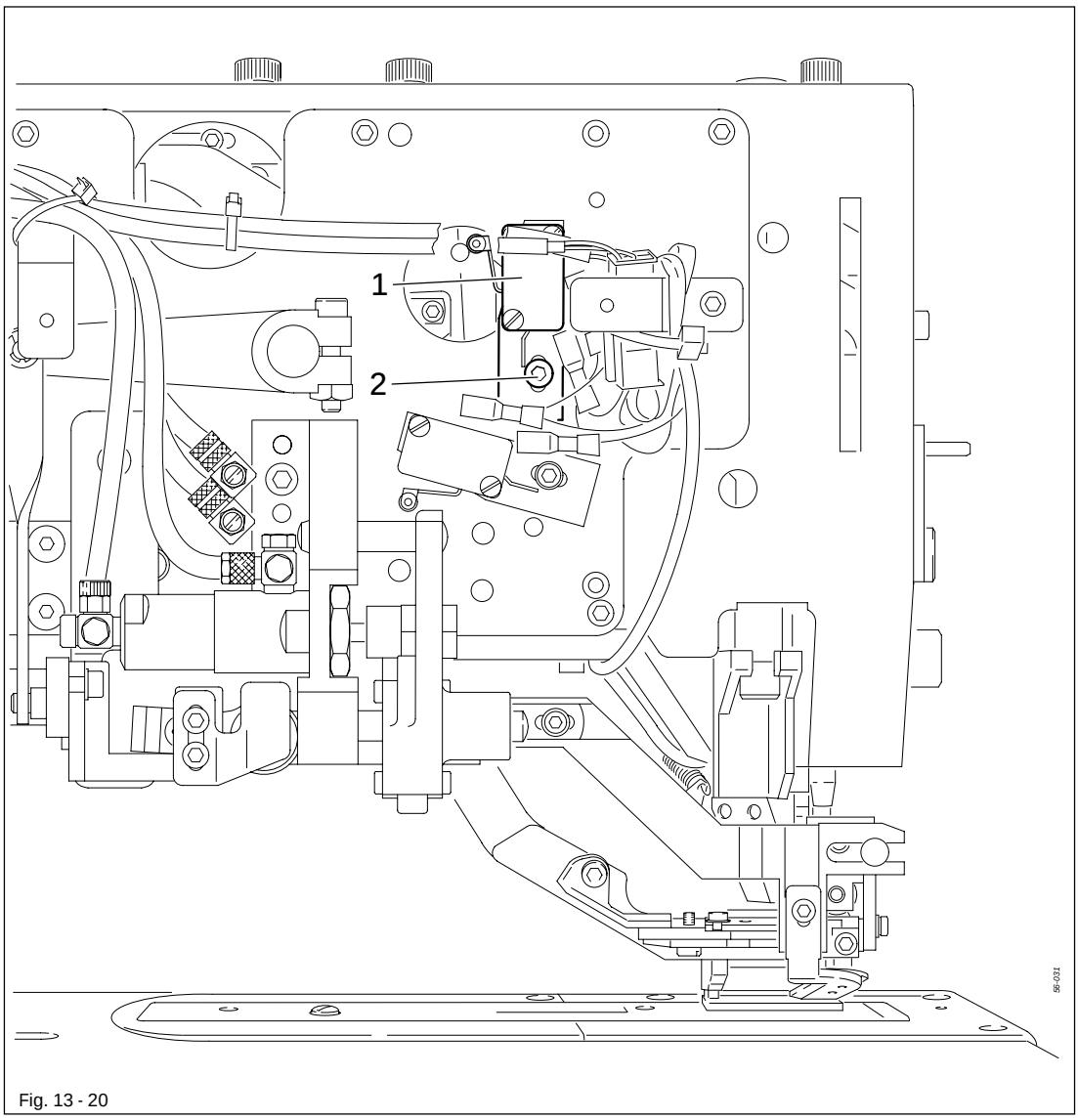

Fig. 13 - 20

- Adjust switch 1 (screw 2) according to the requirement.

13.24 Knife motion

Requirement

1. The fabric must be cut perfectly.
2. The cutting motion should be carried out as quickly as possible.

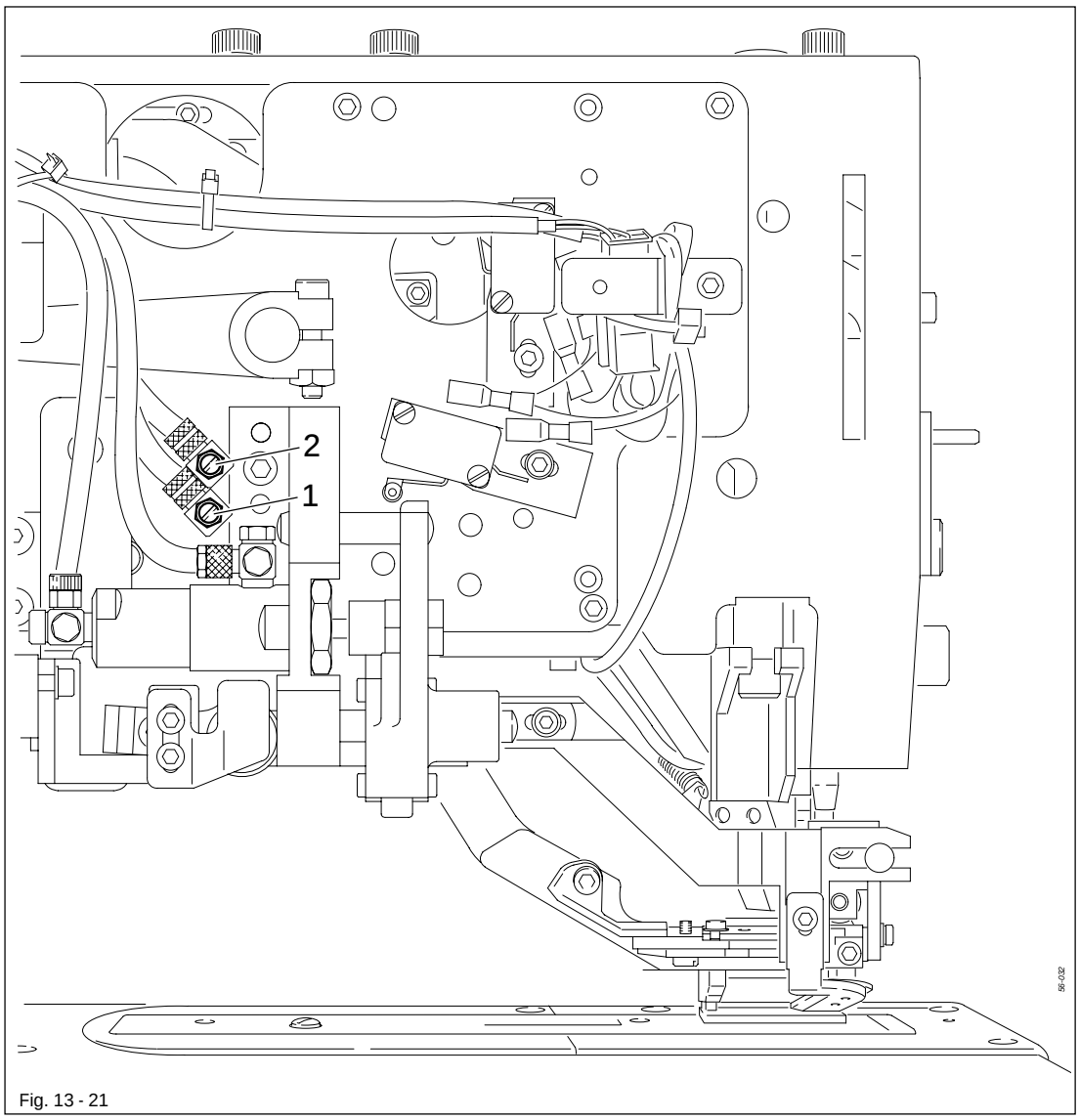

Fig. 13 - 21

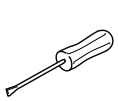

- Adjust the throttles 1 (dropping motion) and 2 (lifting motion) according to the requirements.

13.25 Distance of the knife to the needle bar

Requirement

There should be a distance of 0.2 - 0.5 mm between the knife 3 and the needle bar 4.

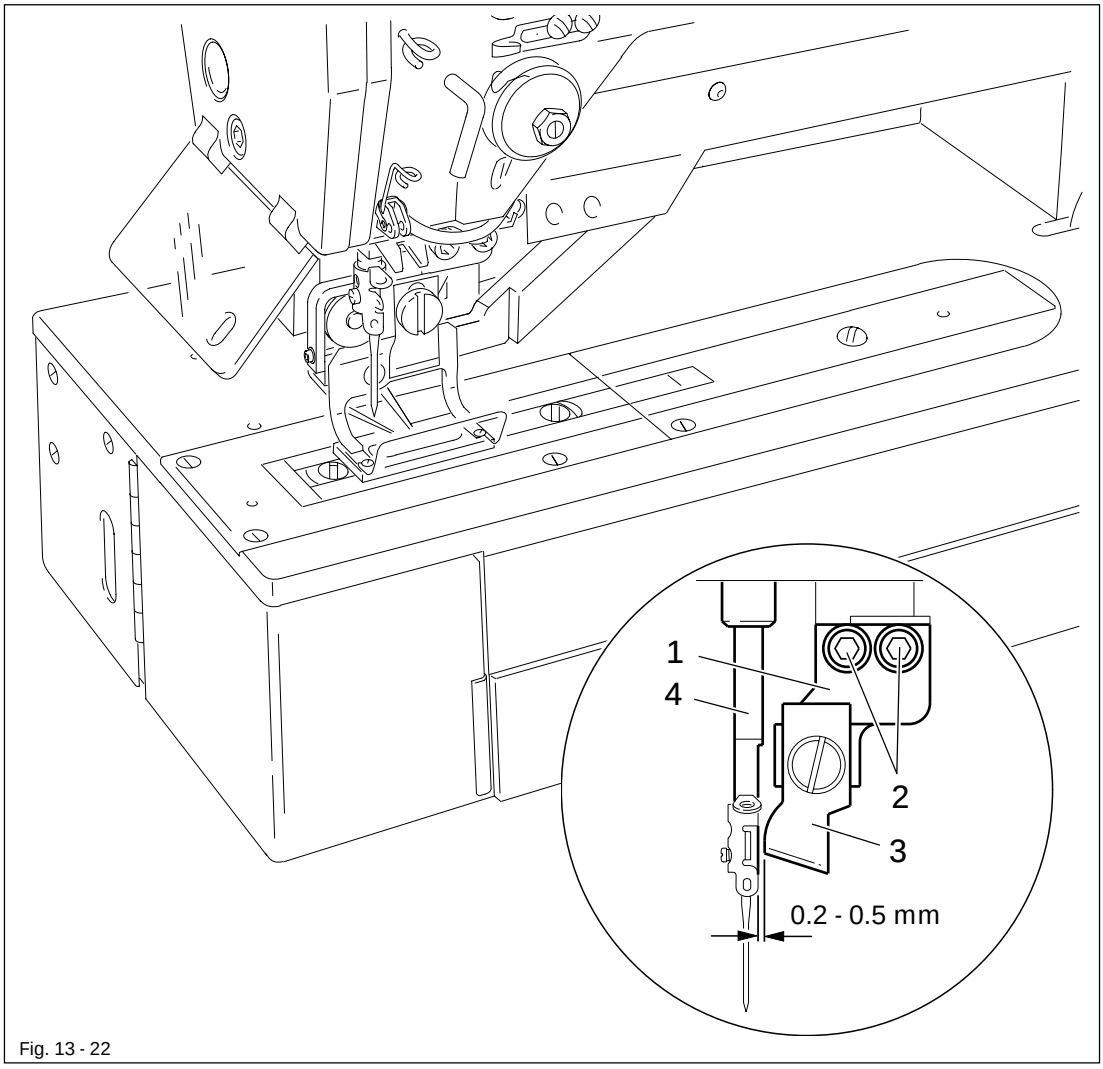

Fig. 13 - 22

- Adjust knife holder 1 (screws 2) according to the requirement.
- Remove compressed air supply.
- Push the knife holder down by hand and check the distance of the knife from the needle plate cutout.

13.26 Changing the knife / knife height

Requirement
When the punching or cutting device is in its neutral position, knife 2 should be 23 mm (punching device) or 20 mm (cutting device) away from needle plate 6.

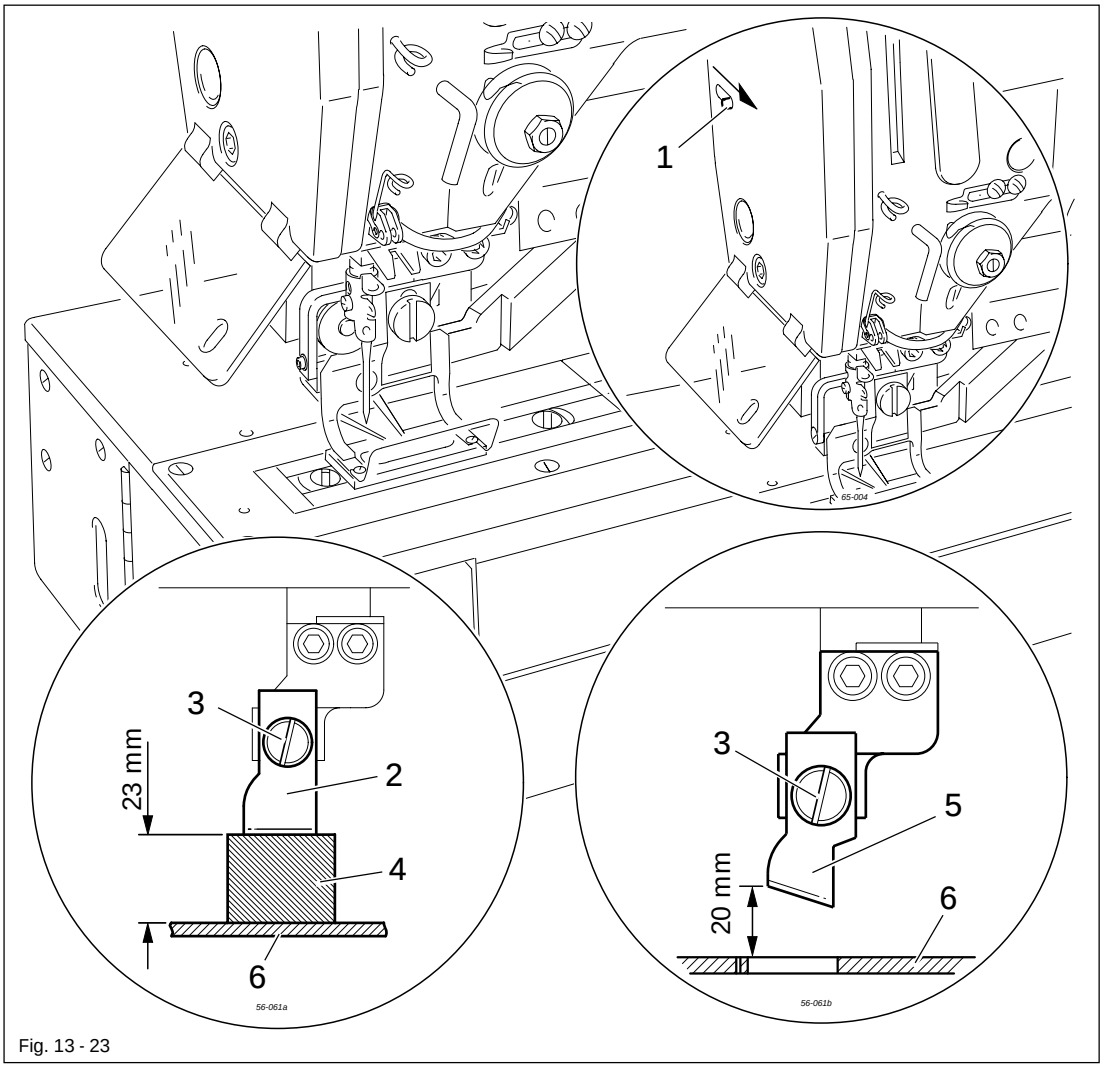

Fig. 13 - 23

Danger of injury from dropping knife!
Activate knife lock (move lever 1 in the direction of the arrow).

Changing the knife:

- Remove and replace knife 2 (screw 3).
- Set the knife height as described below.

Knife height on machines with punching device:

- Adjust knife 2 (screw 3) according to the requirement with the aid of adjustment gauge 4 (Part no. 61-111 635-86).

Knife height on machines with cutting device:

- Adjust knife 5 (screw 3) according to the requirement.

13.27 Functional test

Requirement

1. An inserted thread should be cut cleanly by needle thread cutter 1.
2. After cutting, the thread end should be clamped in such a way that the needle thread cutter 1 is held on the thread.

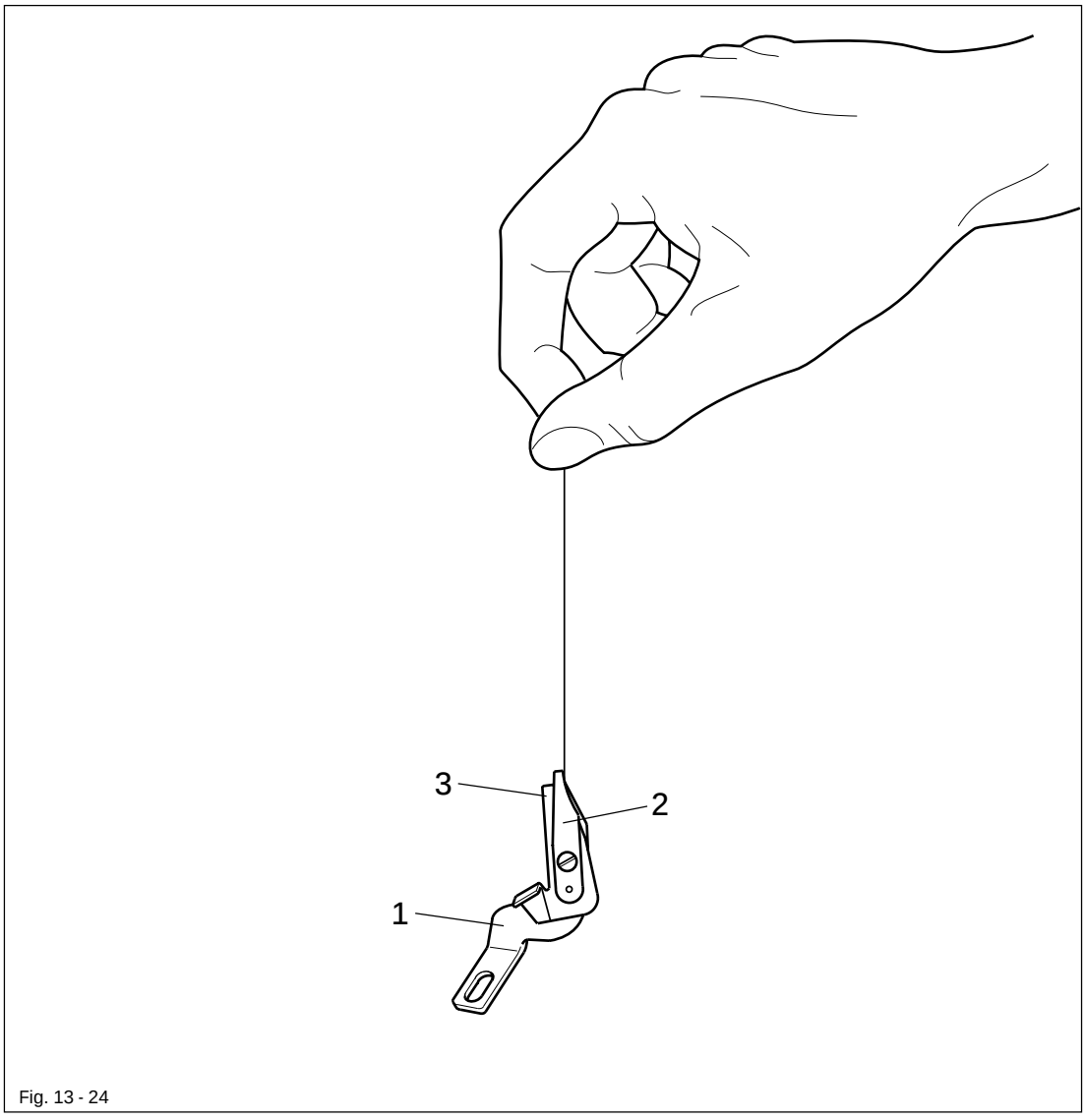

Fig. 13 - 24

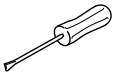

- Dismount needle thread cutter 1.
- Carry out a functional test according to the requirements.
- If necessary, adjust clamp spring 2 or roughen the clamping surfaces.
- Fit the needle thread cutter 1.

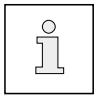

If the thread is damaged during clamping, the clamp hold is too tight. There should be no sharp edges on the clamping surfaces of the top cutter section 3, but this must have an adequate clamping surface.
Smooth clamping surfaces have a negative effect on the clamping action.

13.28 Needle thread cutter (vertical and horizontal adjustment)

Requirement

1. The distance between the lower edge of the needle thread cutter **1** and the work clamp **5** must be **0.5 mm.**
2. The opened needle thread cutter **1** should reliably catch the needle thread.

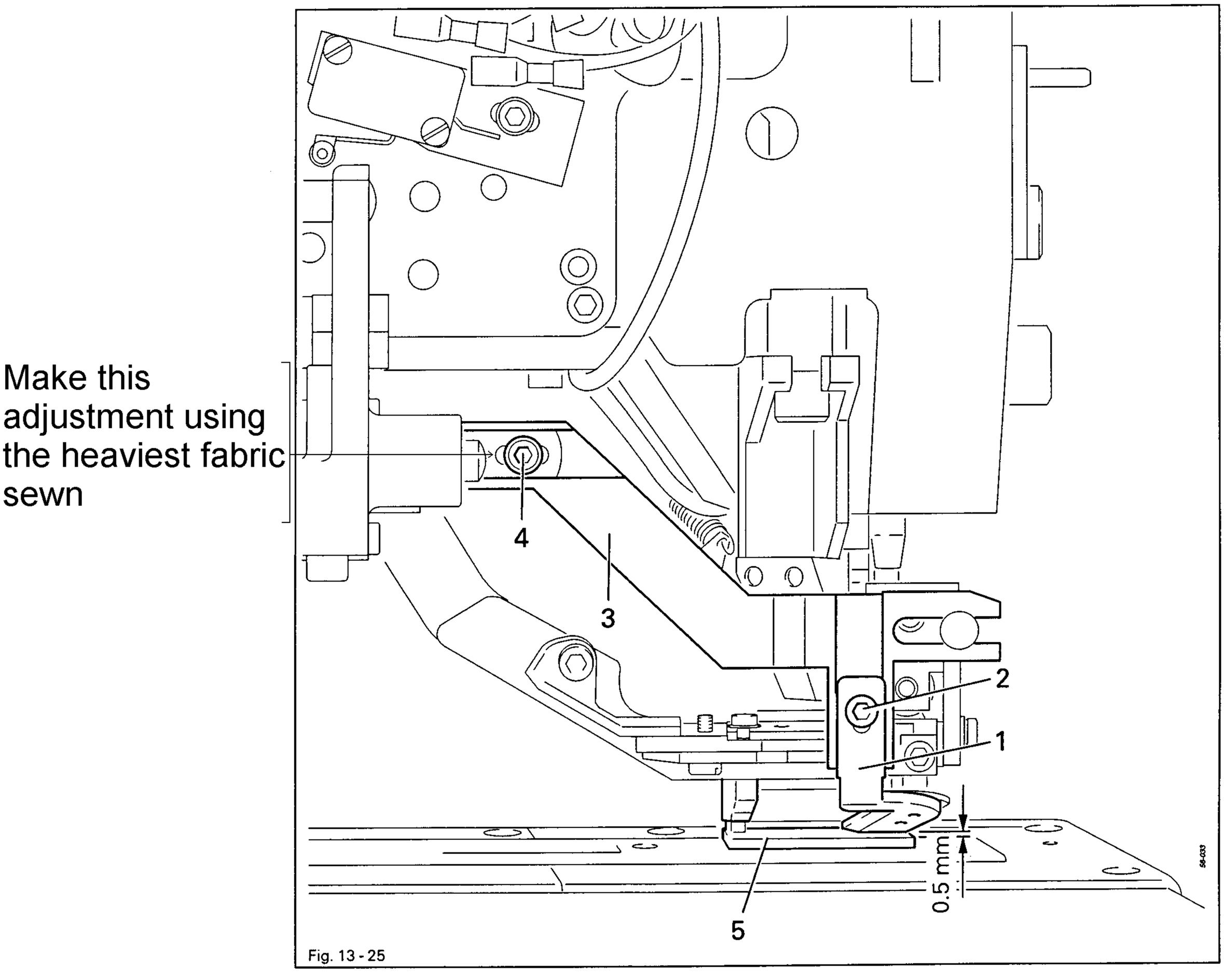

Fig. 13 - 25

- Adjust the needle thread cutter **1** (screw **2**) according to **requirement 1.**
- Adjust clamp **3** (screw **4**) according to **requirement 2.**

13.29 Cam guide unit

Requirement

The starting thread should be sewn over with no problem.

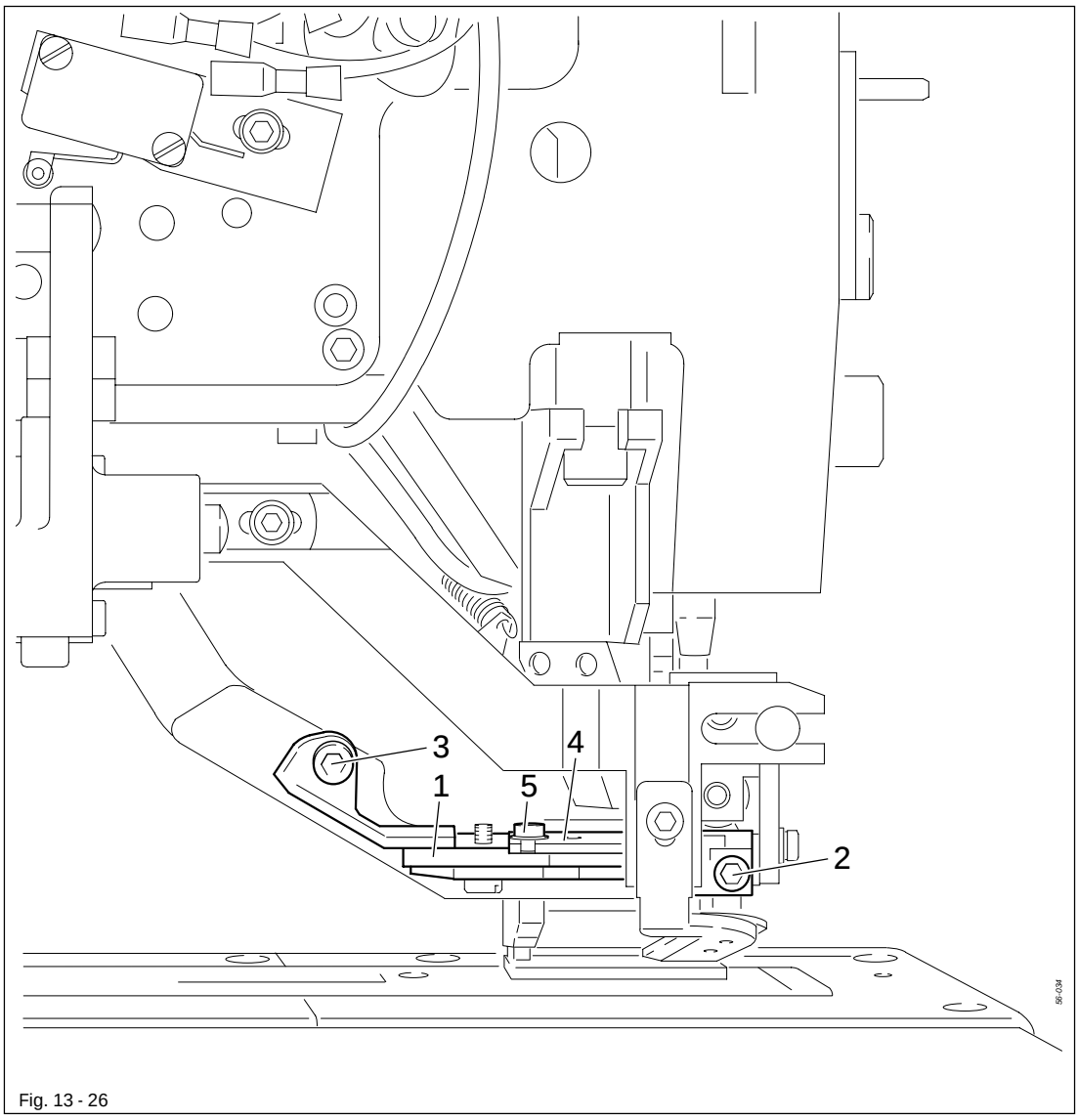

Fig. 13 - 26

- Bring the machine into its basic position and retract the cutter cylinder completely.
- Adjust the cam guide unit 1 (screws 2 and 3) according to the requirement.
- Adjust drive plate 4 (screw 5) according to the requirement.

The opening and swinging out of the needle thread cutter must be corrected during sewing, if necessary.

13.30 Needle thread cutter stroke

Requirement
The stroke length between the extended and retracted cutter cylinder **3** should be **4.5 mm.**

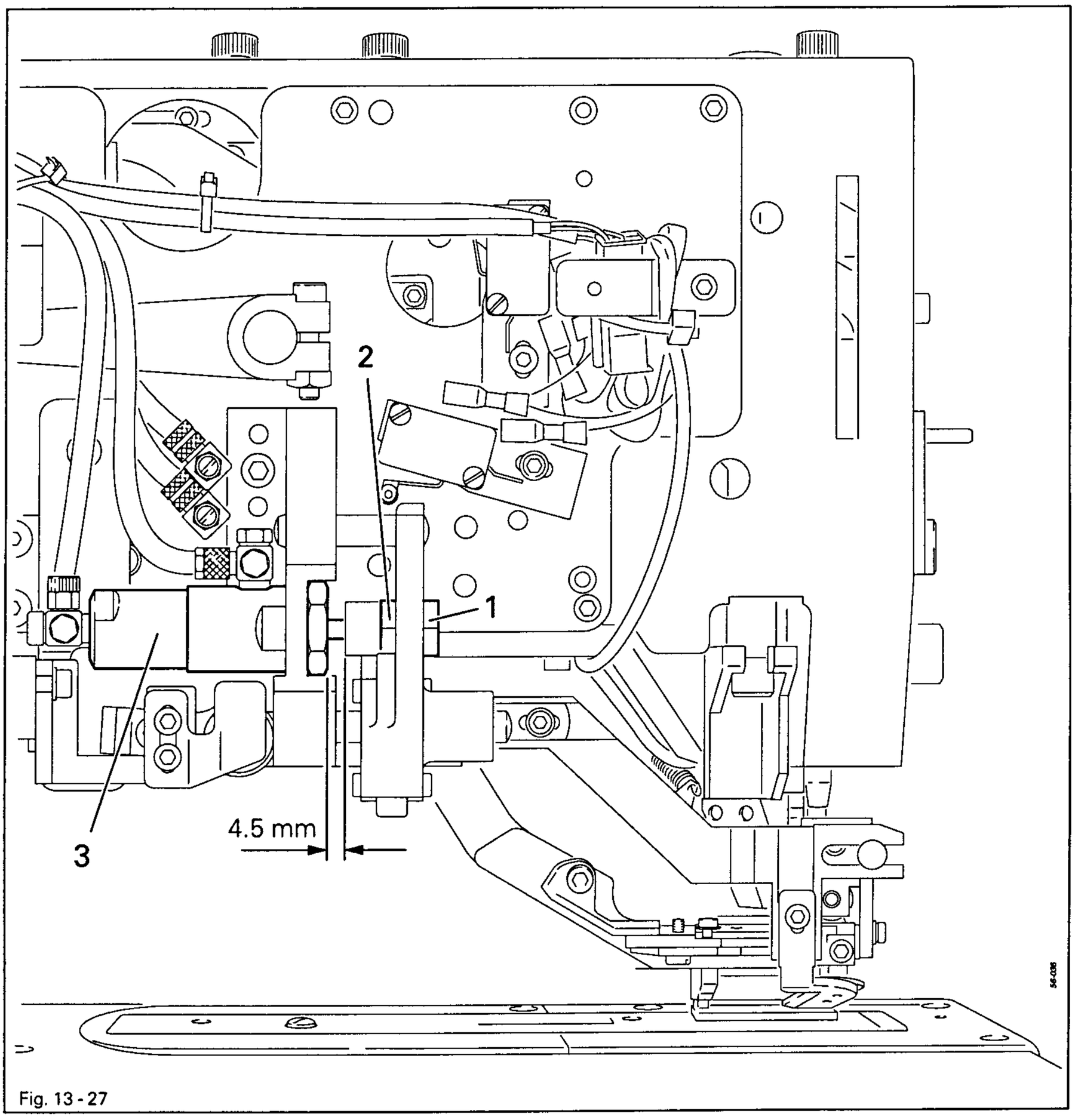

Fig. 13 - 27

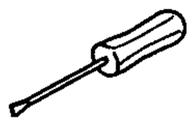

- Adjust nut **1** (locking nut **2**) according to the **requirement.**

To check, put the machine in the sewing mode and use the step forward or step backward button.

13.31 Needle thread cutter switch

Requirement
When the cutter cylinder 3 is retracted, switch 1 should be reliably activated.

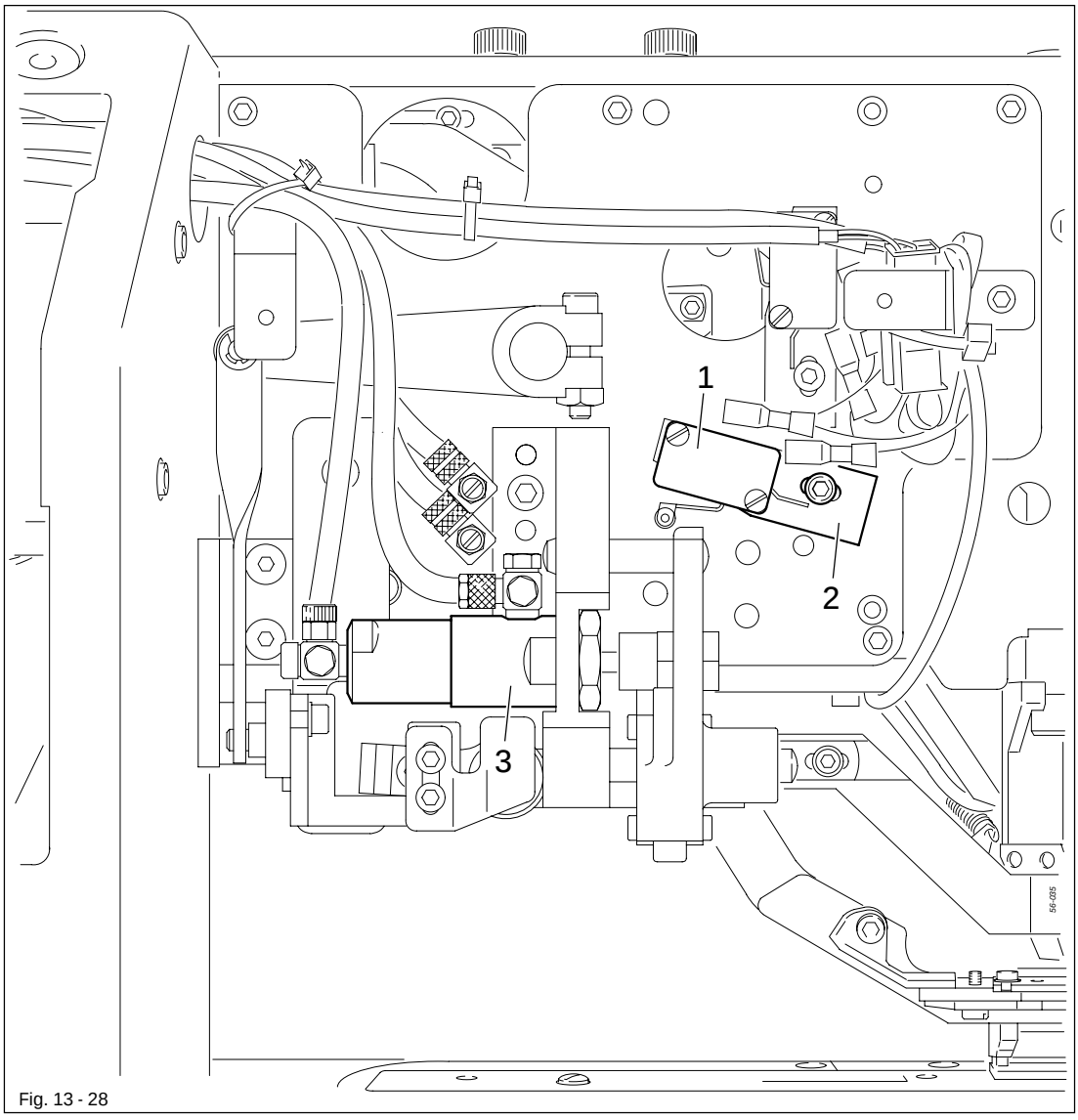

Fig. 13 - 28

- Adjust switch 1 (screw 2) according to the requirement.

13.32 Needle thread cutter release

Requirement With the clamp lowered.

1. Adjustment hole **6** must match the hole in the mounting plate **7.**
2. There should be a space of **approximately 1 mm** between the lower edge of pawl **5** and the upper edge of catch **8.** (The thread should not be cut until the needle thread tension unit is open.)

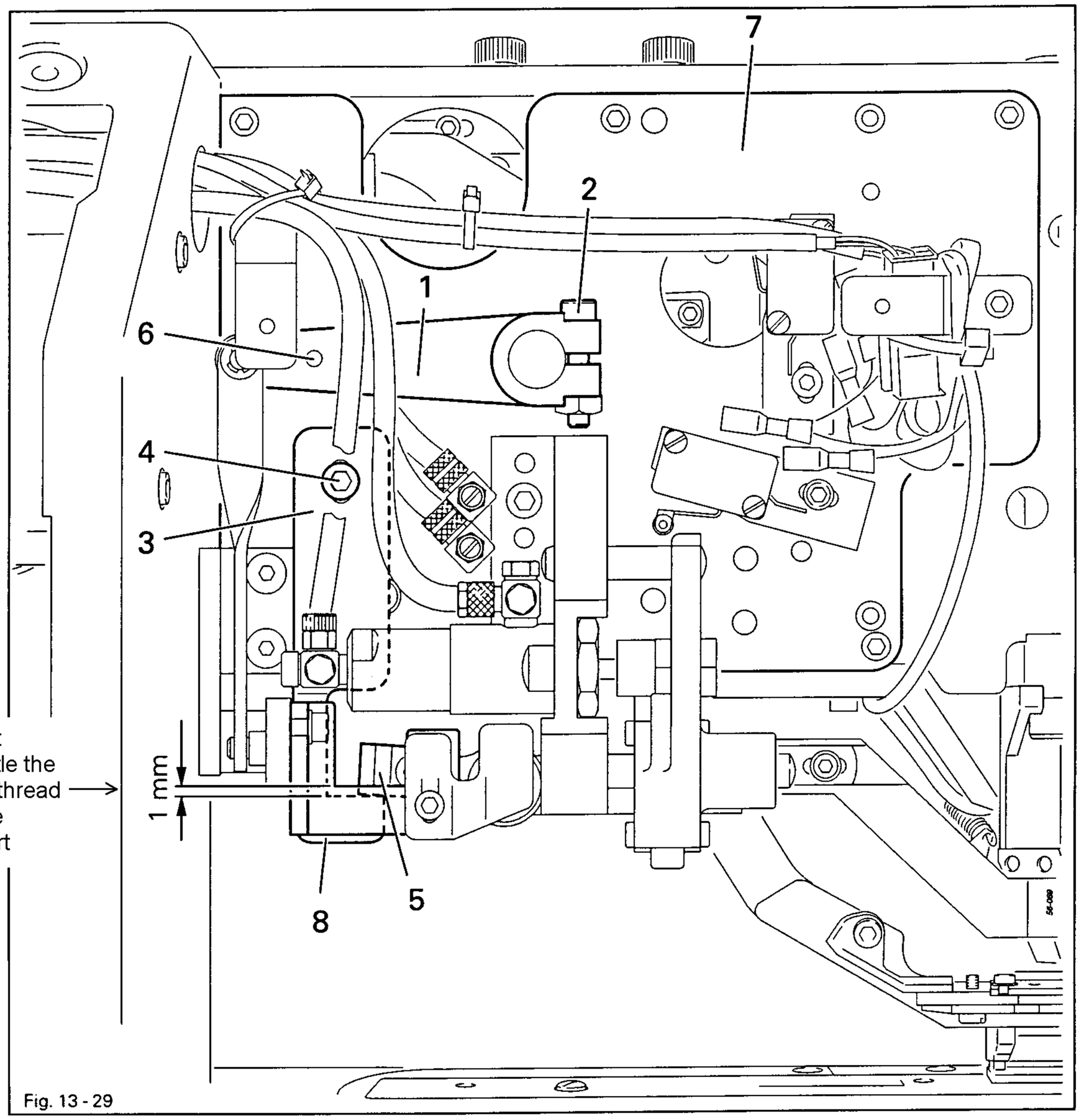

This setting must be at least 1mm. If the setting is too little the thread nipper will catch the thread too early causing the needle thread to pull out on the start →

Fig. 13 - 29

- Adjust lever **1** (screw **2**) according to **requirement 1** with the aid of the adjustment pin (Part no. 61-111 641-46).
- Disengage the needle thread cutter by hand.
- Adjust bar **3** (screw **4**) according to **requirement 2.**
- Raise pawl **5** and allow the needle thread cutter to engage.

13.33 Catch

Requirement
When the cutter frame 1 is at the highest point of the cam guide unit 2, there should be a space of 0.2 mm between catch 3 and pawl 6.

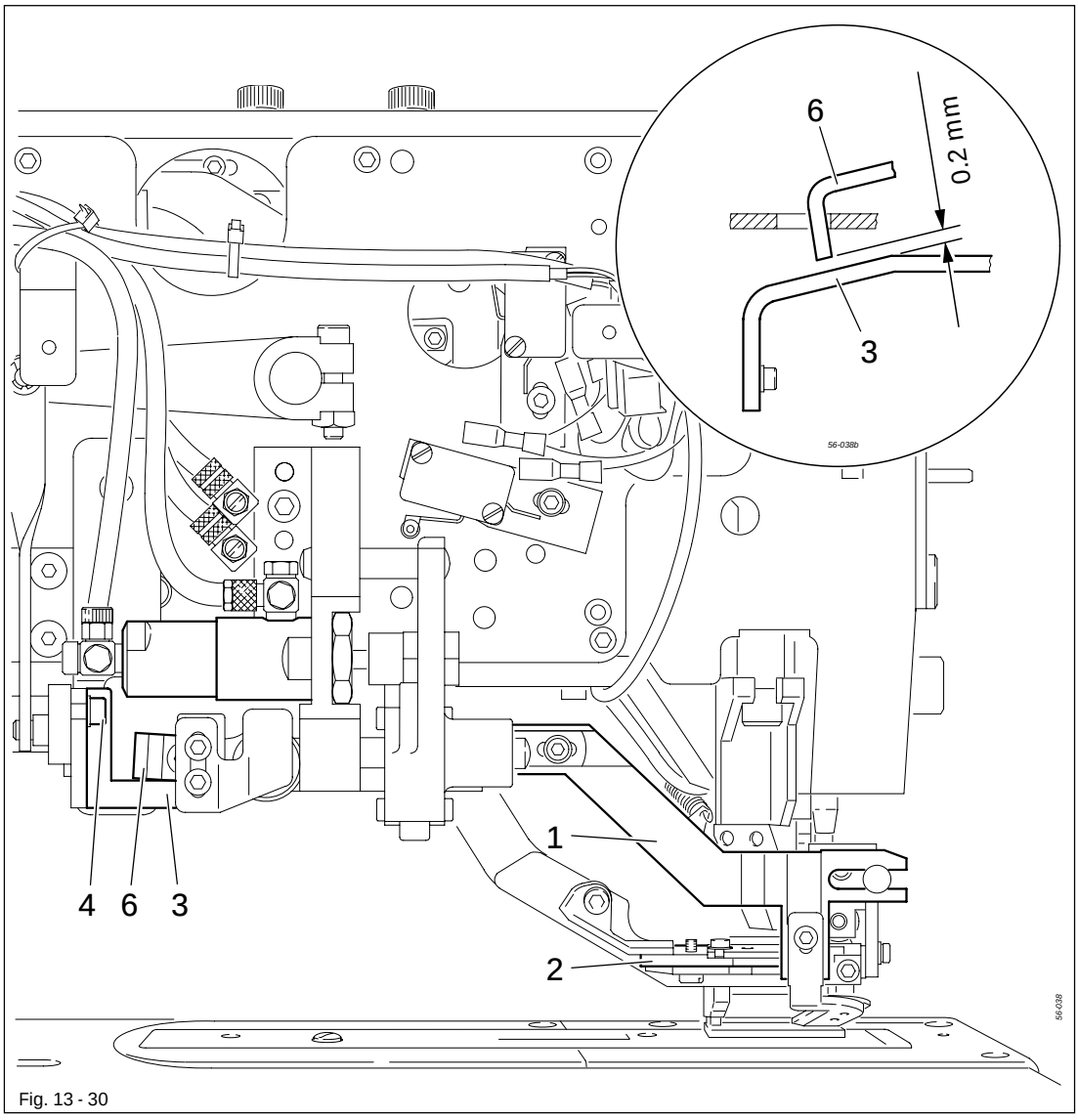

Fig. 13 - 30

- Connect the machine to the compressed air system and switch on the machine at the on / off switch.
- Move through the seam construction step by step until the cutter frame 1 is at the highest point of the cam guide unit 2.
- Adjust catch 3 (screw 4) according to the requirement.
- Move the machine further until reaching the basic position.
- Switch off the on/off switch and disconnect the machine from the compressed air system.

13.34 Swing out motion of the needle thread cutter

Requirement

1. Before the swing out motion begins, the needle thread cutter **4** should have clamped and cut the thread reliably.
2. When the needle thread cutter **4** swings out, it should not touch the needle point.

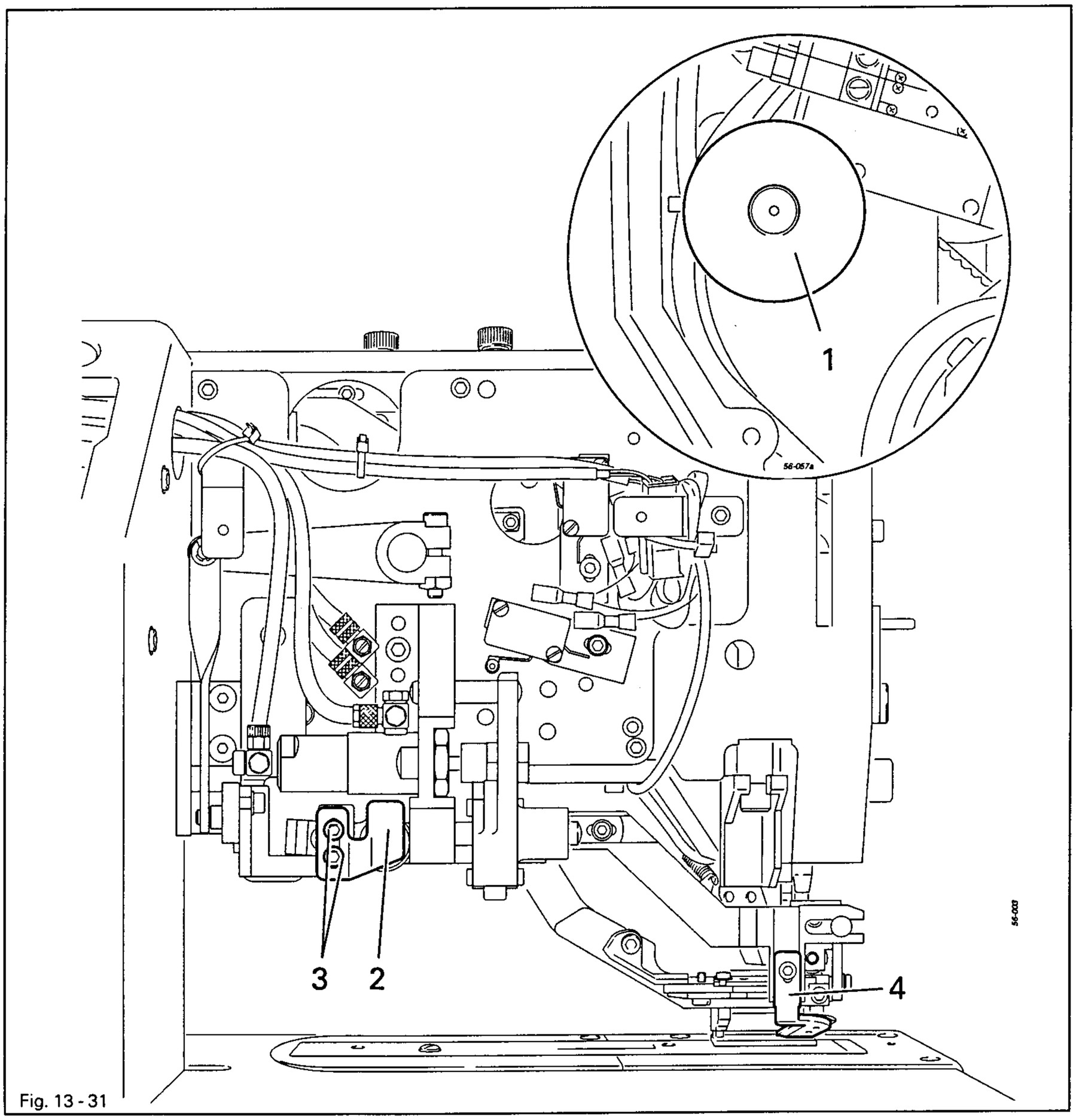

Fig. 13 - 31

- Bring the machine to t.d.c. take-up lever (balance wheel **1**).
- Adjust cam **2** (screws **3**) according to the **requirements.**

For final setting of needle thread cutter.

Using the heaviest fabric sewn, run the machine through a cycle and disable the center knife action, position the thread nipper as shown in drawing.
Set the machine for a knife cut of 6.4mm (mim. size) and check making sure the thread cutter is completely locked out.

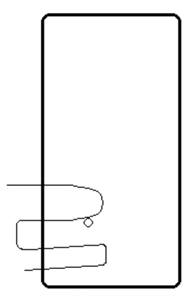

13.35 Needle bar rise and hook-to-needle clearance

Requirement

1. When the needle penetrates the right side of the left purl seam, the needle bar rise should be 2.4 mm.
   When this happens, the point of the hook 5 should point exactly to the centre of the needle6 and there should be a clearance of 0.1 mm between the needle 6 and the hook point 5.

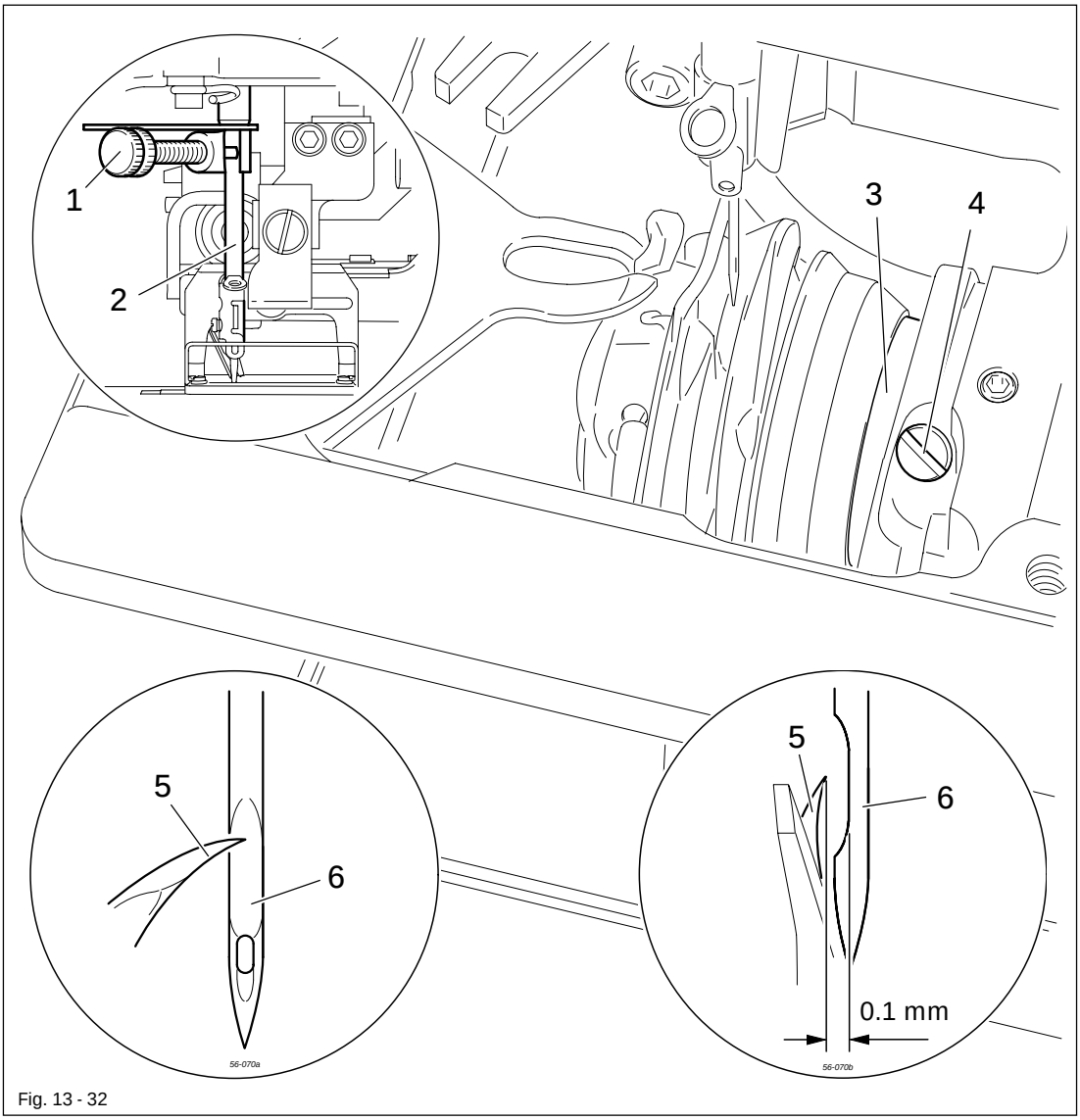

Fig. 13 - 32

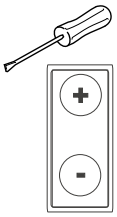

- Dismantle the feeder, needle plate and knife.
- Switch on the machine.
- Select parameter "610".
- Disengage the needle thread cutter by hand.
- Select position "1" (left purl seam, right penetration point).

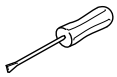

- Bring the needle to b.d.c.
- Fit screw clamp 1 (Part no. 61-111 600-35/001) to needle bar 2.
- Bring 2.4 mm needle rise gauge (Part no. 61-111 600-09) between the screw clamp 1 and the guide stop of the needle bar 2.
- Loosen the screw clamp 1, slide up as far as possible and tighten it again.
- Remove the needle rise gauge.
- Turn the balance wheel in the direction of sewing until screw clamp 1 has contact.
- Turn hook sleeve 3 (screws 4) according to requirement 1 and adjust it according to requirement 2.
- Loosen and remove screw clamp 1.

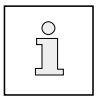

The machine remains switched on for the next adjustment.

13.36 Needle bar height and needle guard

Requirement

1. When the needle penetrates the right side of the right purl seam, there should be a clearance of 0.5 mm between the top edge of the needle eye 1 and the hook point 2 at the end of the needle rise.
2. When the needle penetrates the right side of the left purl seam, in needle rise position the needle should lightly touch needle guard 3.

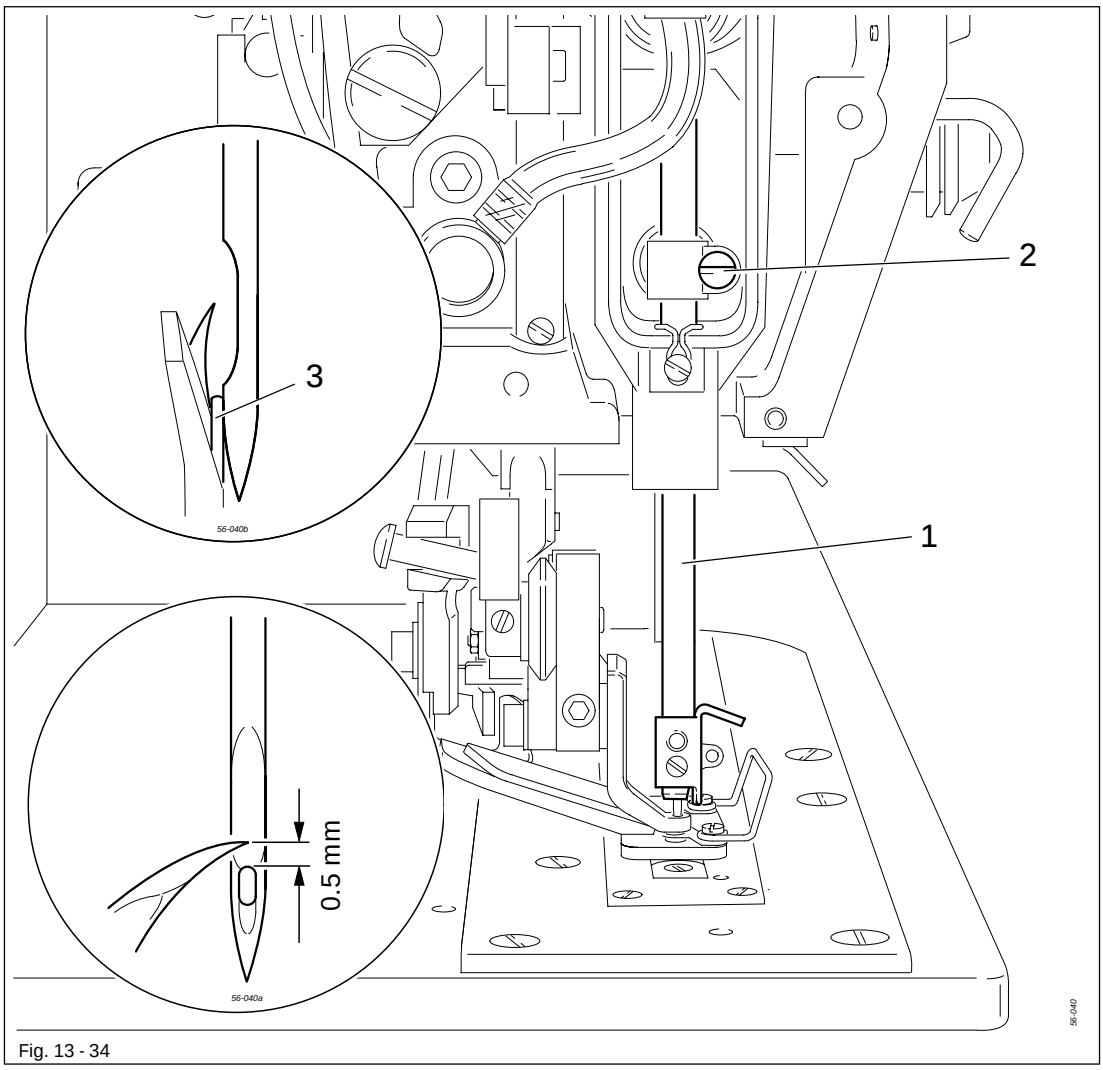

Fig. 13 - 34

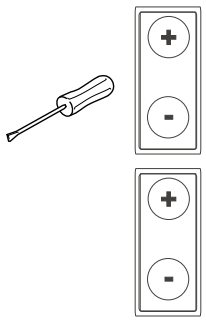

- Select position "2" (right purl seam, right needle penetration).
- Adjust the needle bar 1 (screw 2) according to requirement 1.
- Select position "1" (left purl seam, right needle penetration).
- Align needle guard 3 according to requirement 2.
- Switch off the machine.

13.37 Bobbin case holder

Requirement
The bobbin case holder should be scarcely but reliably held.

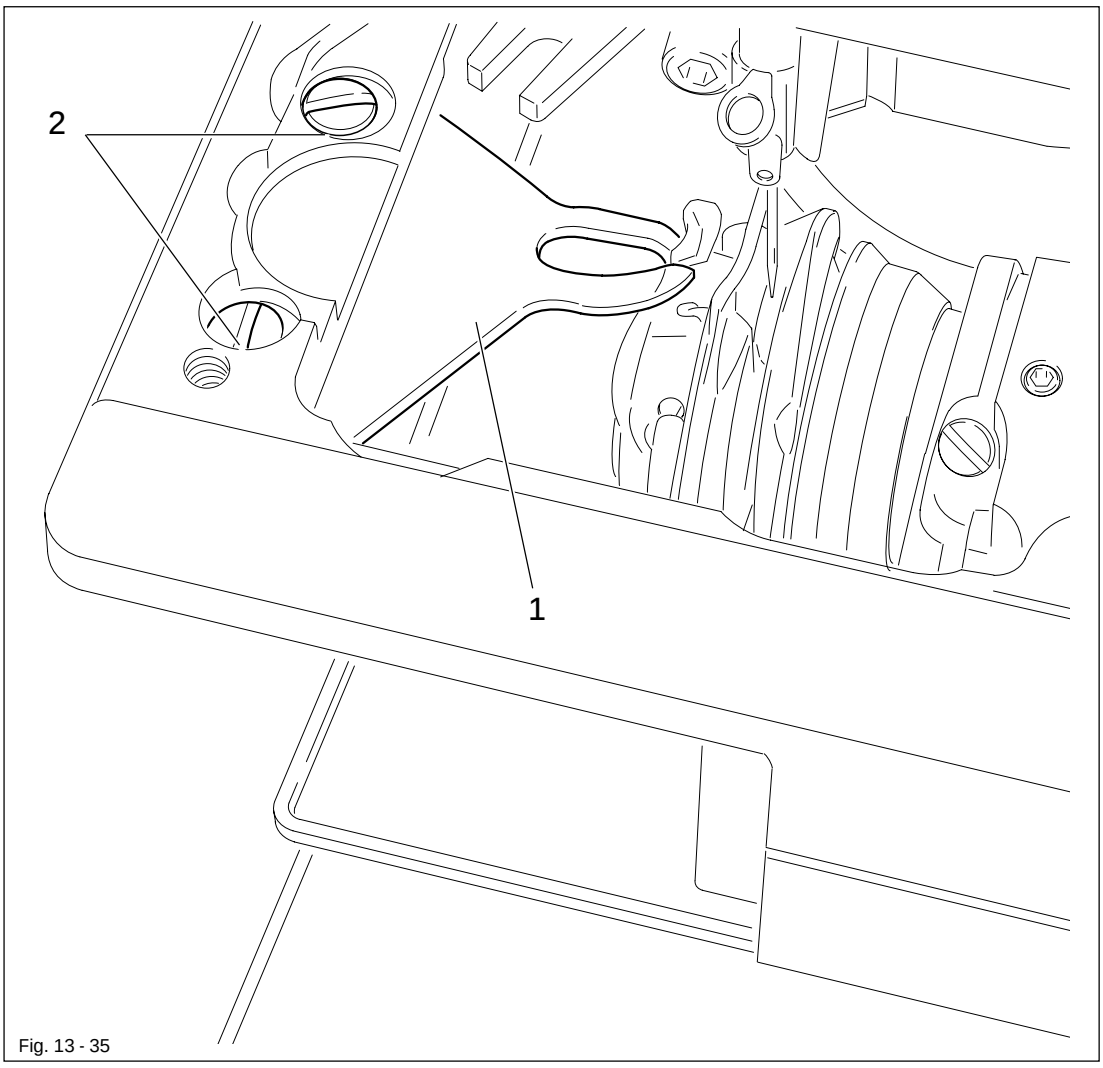

Fig. 13 - 35

- Adjust bobbin case holder 1 (screws 2) according to the requirement.
- Move the needle plate against the stop and screw tight.

13.38 Hook lubrication

Requirement

1. After approx. 10 sewing cycles, a fine oil streak should appear on a piece of paper held below the hook.
2. The felt ring should lightly touch the spring-loaded metal disc.

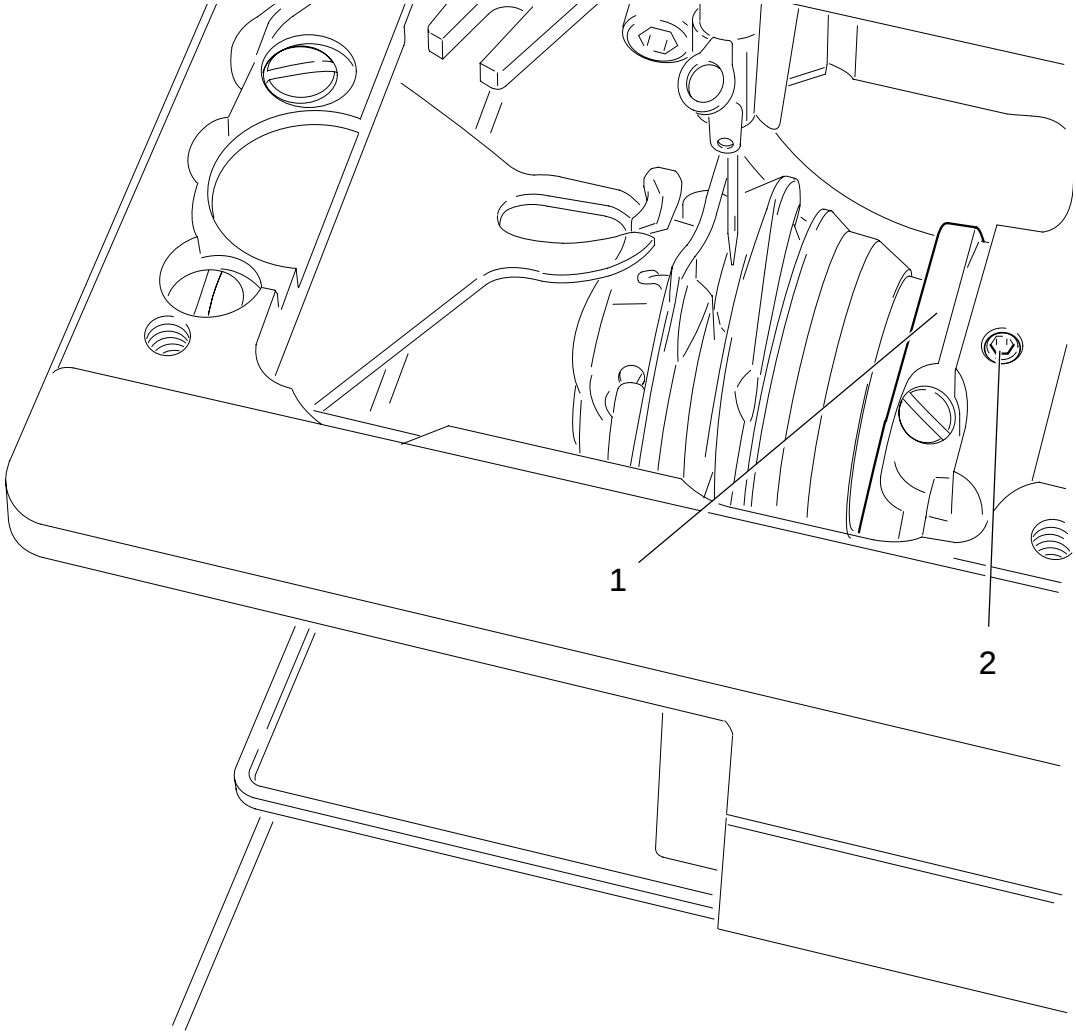

Fig. 13 - 36

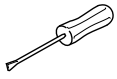

- Check the oil level according to Chapter 12.06 Oil level for the hook.
- Switch on the machine.
- Adjust oil guide ring 1 (grub screw 2) according to the requirements.
- Switch off the machine.

13.39 Knife position

Requirement

1. (When the bobbin thread trimming device is in its neutral position), knife 1 should be parallel to the edge of the needle hole with a clearance of 0.5 mm.
2. During the cutting motion, the catcher 3 should move as near as possible to knife guard 5 without touching it.

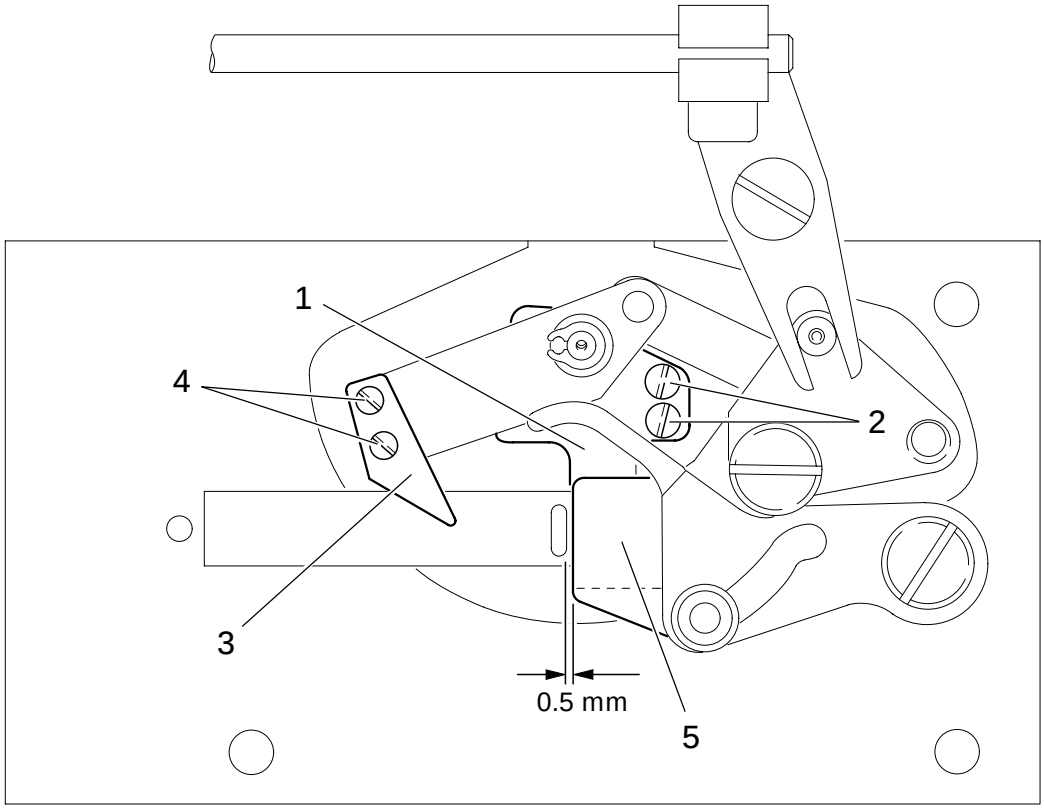

Fig. 13 - 37

- Adjust knife 1 (screws 2) according to requirement 1.
- Adjust catcher 3 (screws 4) according to requirement 2.

13.40 Knife guard

Requirement (clamp down)

1. When the bobbin thread trimming device is in its neutral position, knife guard **3** should be parallel to the edge of the knife **4.**
2. The stud **5** should not touch the bottom of the cam (set clamp **1** in a vertical position).

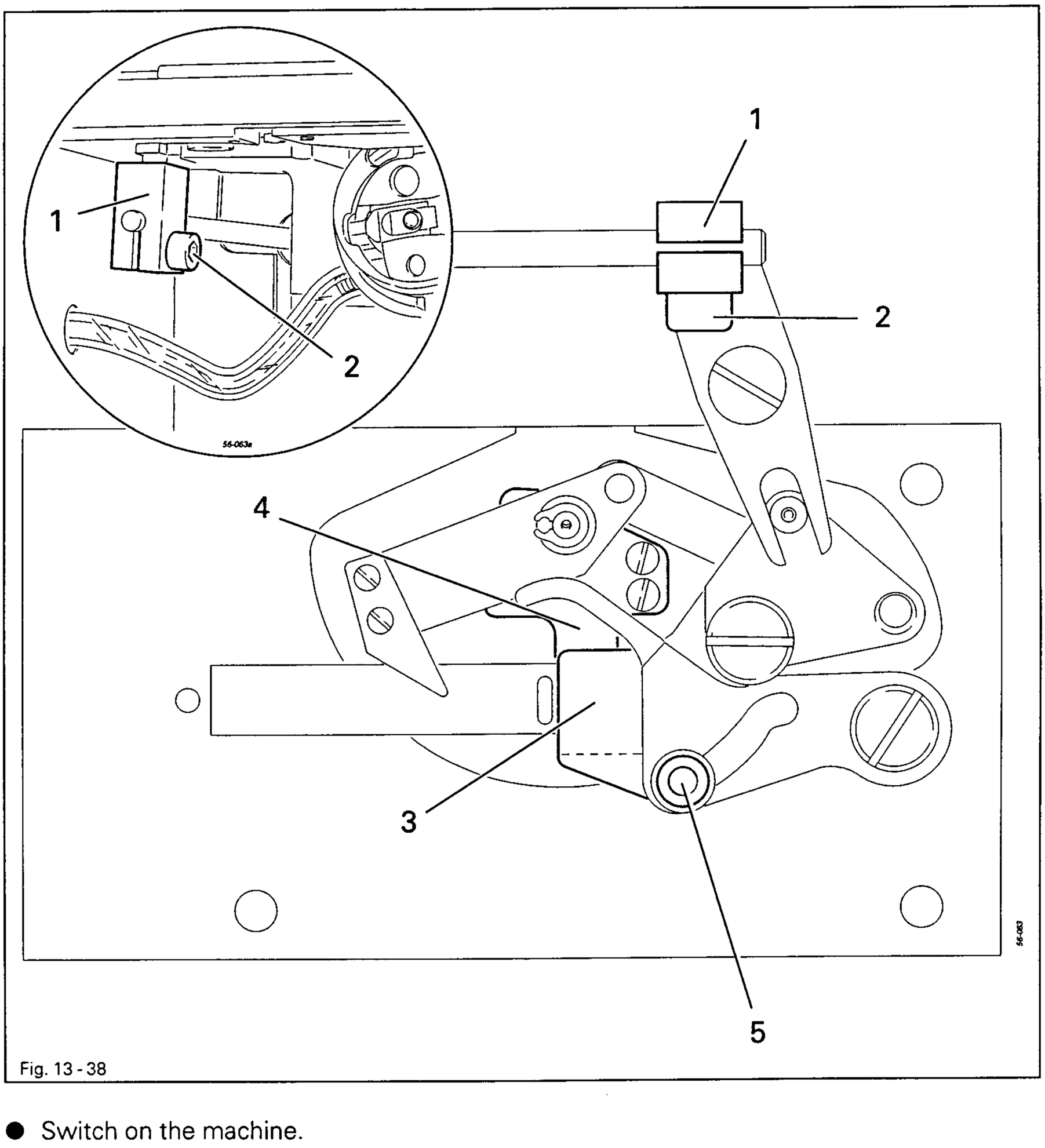

Fig. 13 - 38

- Switch on the machine.
- Dismantle feeder and needle plate insert.
- Switch off the machine and disconnect the compressed air supply.
- Adjust clamp **1** (screw **2**) according to the **requirements.**
- Lift work clamp and fit needle plate insert and feeder.

13.41 Needle thread tension release

Requirement

1. When the thread tension unit 6 is in its neutral position, the release magnet 7 should be 3 mm away from case 8.
2. The thread tension unit 6 should open before the cutter cuts the thread.

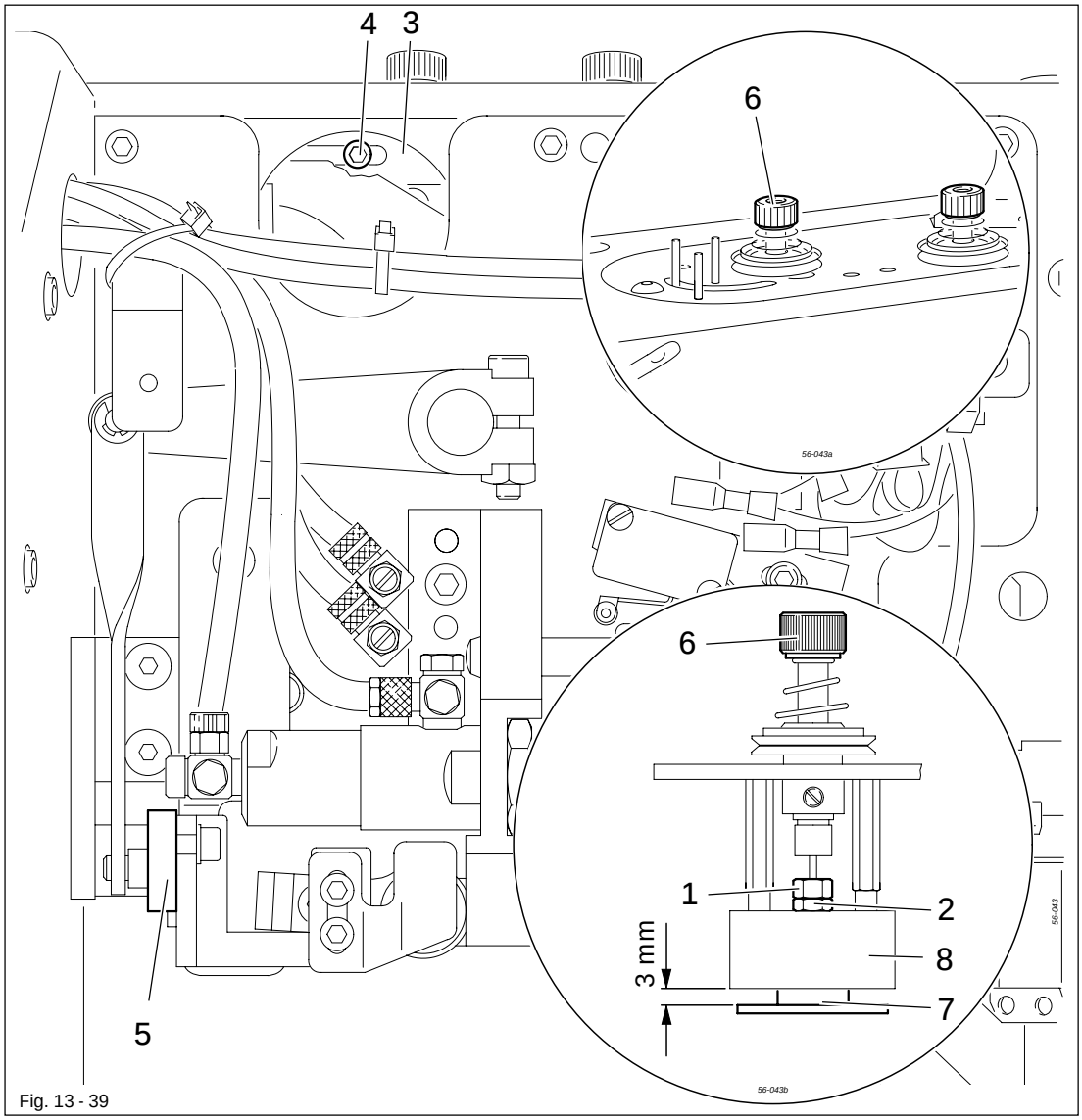

Fig. 13 - 39

- Remove the tension plate.
- Adjust nut 1 (locking nut 2) according to requirement 1.
- Adjust release 3 (screw 4) according to requirement 2.
- Check the adjustment by operating lever 5.

13.42 Needle thread puller

Requirement

1. When sewing starts, the needle thread should not be pulled out of the needle thread cutter.
2. The loose needle thread must be used up after the first stitch.

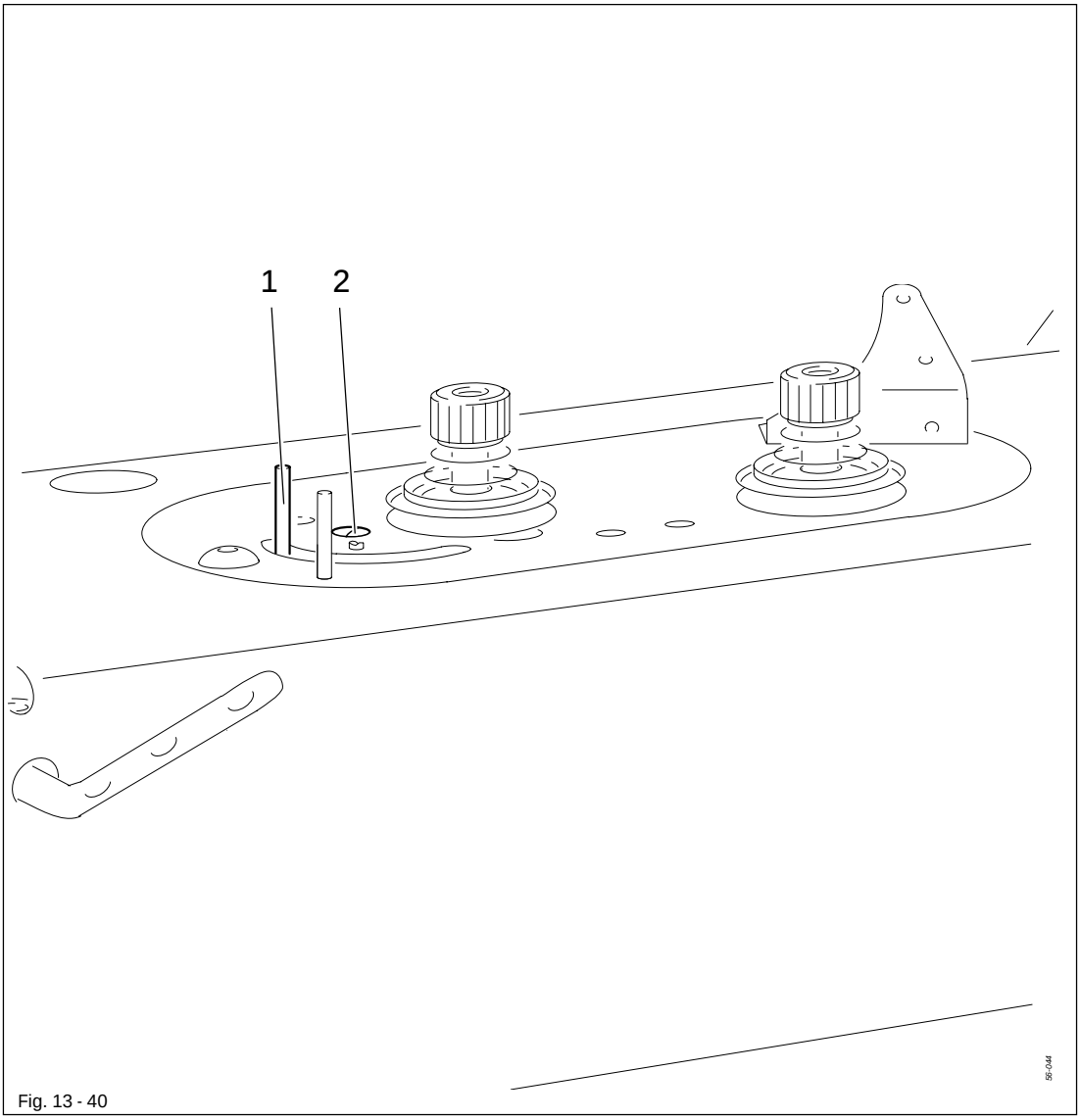

Fig. 13 - 40

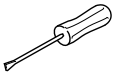

- Adjust needle thread puller 1 (screw 2) according to the requirements.

13.43 Side thread tension and slack thread regulator

Requirement

Thread check spring 5 should be

1. flush with the top edge of bar 6 and
2. rise slightly from its position rest when the thread loop through the hook is at its largest.

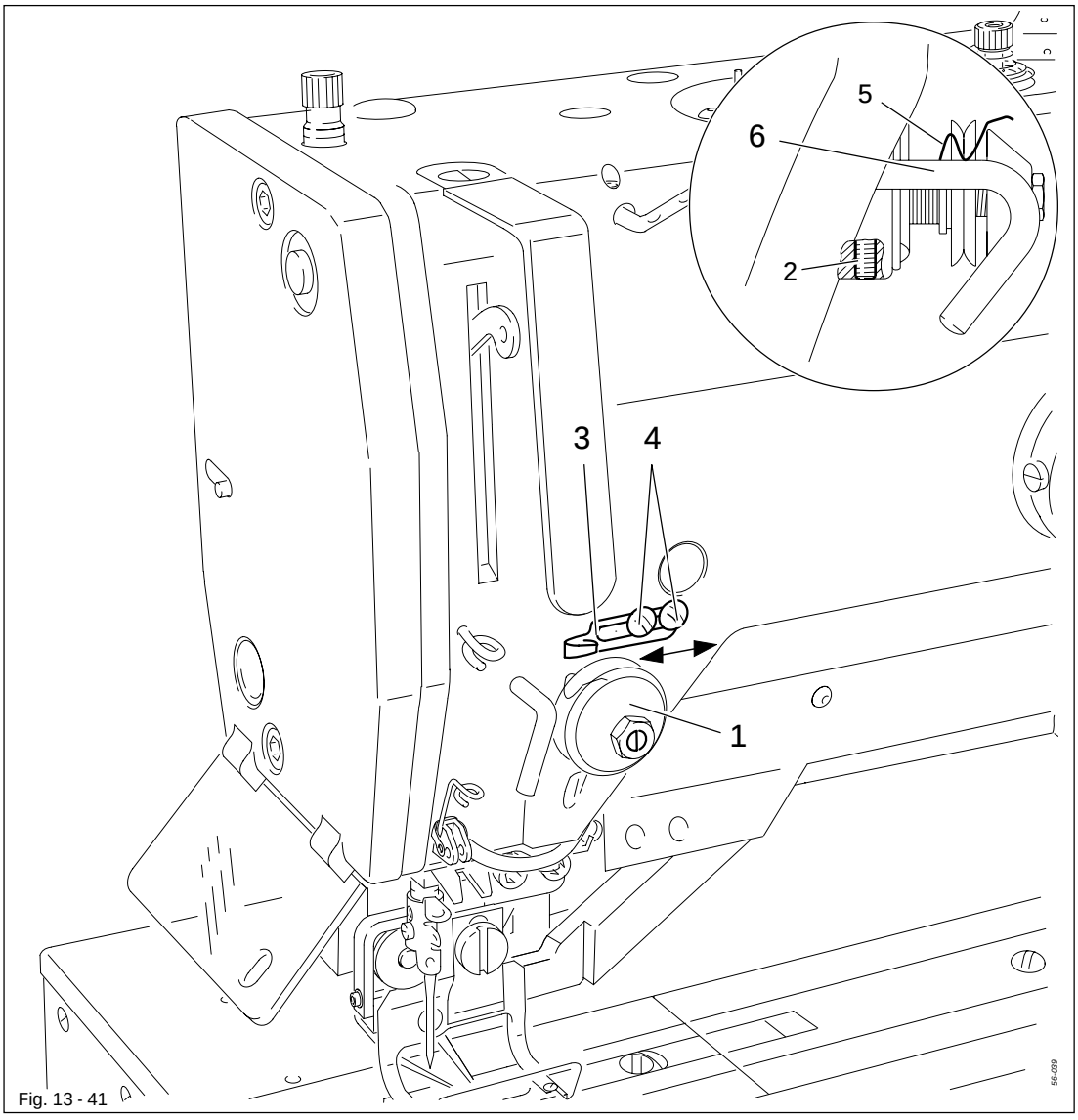

Fig. 13 - 41

- Thread the needle thread.
- Adjust the thread tension unit 1 (grub screw 2) according to requirement 1.
- Adjust the slack thread regulator 3 (screws 4) according to requirement 2.

The stroke of thread check spring 5 and the position of slack thread regulator 3 are dependent on the material and must be adjusted in accordance with the sewing results.

13.44 Bobbin winder

Requirement

1. When the bobbin winder is activated, the friction wheel 5 should be driven reliably.
2. When the bobbin winder is deactivated, the drive wheel 1 should not touch friction wheel 5.
3. When the bobbin is filled up to 1 mm from the edge, the bobbin winder should switch off automatically.

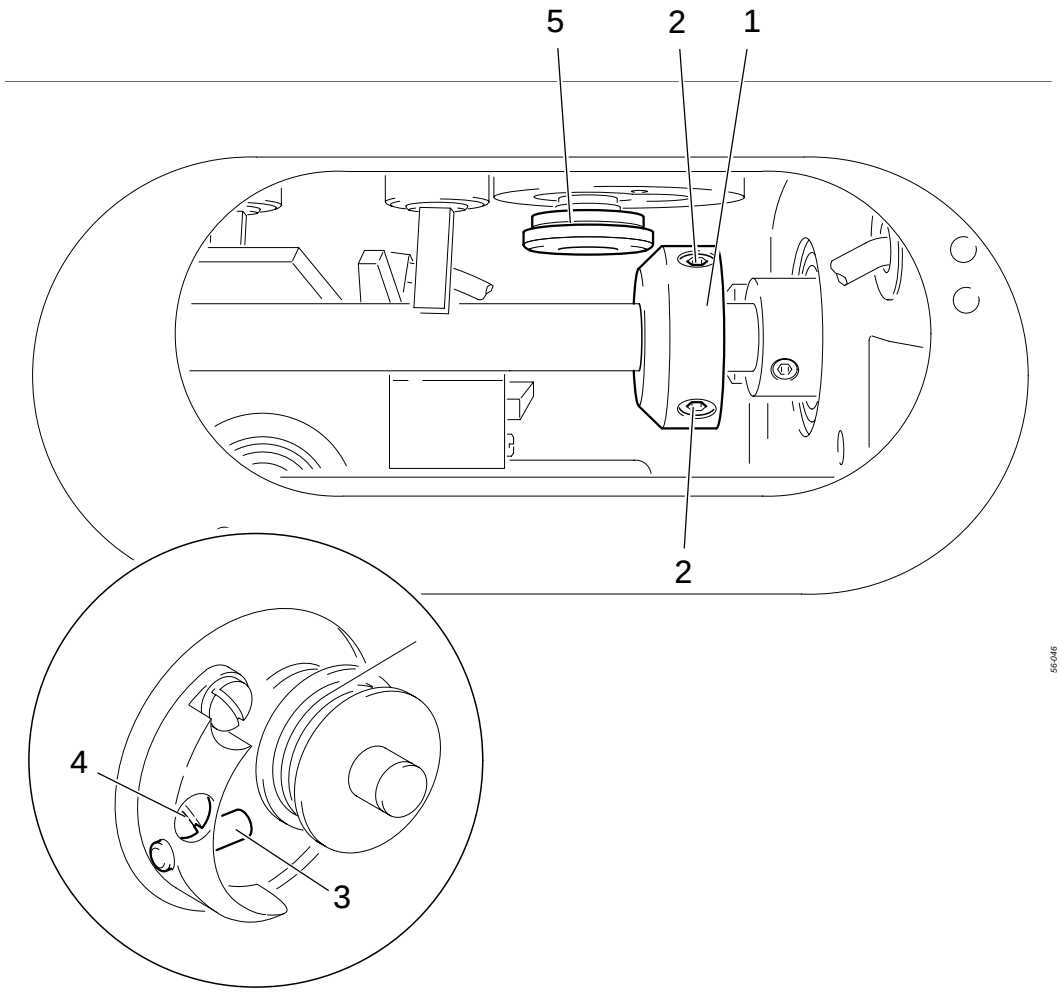

Fig. 13 - 42

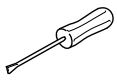

- Adjust drive wheel 1 (screws 2) according to requirements 1 and 2.
- Adjust stud 3 (screw 4) according to requirement 3.

13.45 Retainer position (only for 3119-2/63)

Requirement

Retainer 1 should

1. be positioned parallel to the cutting slot with its front edge flush with the needle hole and
2. as near as possible over the workpiece without restricting it.

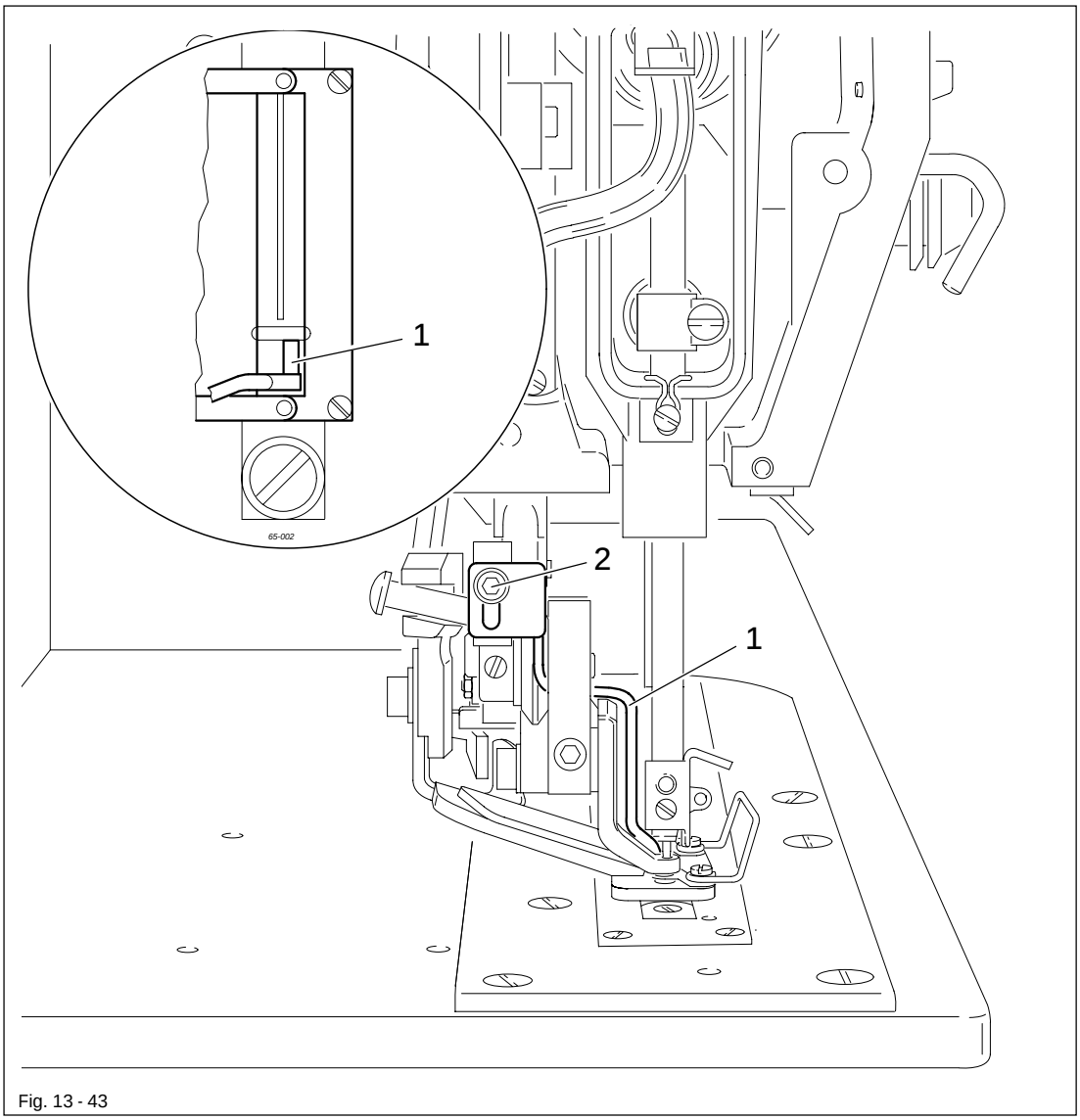

Fig. 13 - 43

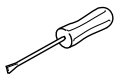

- Adjust retainer 1 (screw 2) according to the requirements.

13.46 Carrying out a cold start

When a cold start is carried out, all newly created or modified programs, and all altered parameter settings are deleted!

The machine returns to its state at the time of delivery.

- Switch on the machine.

- Switch to parameter input (LED in key is not on).

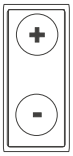

- Select the function group "600" with the appropriate plus / minus key.

600

- Confirm input with Enter.
- Enter the code, see Chapter 11.03 Entering / altering the access code.

601

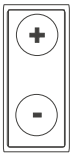

- Select parameter "608" (carry out a cold start) with the appropriate plus / minus key.

608 RESET

- Confirm input with Enter.

SWITCH OFF

- Switch the machine off and then on again.

13.47 Parameter settings

In the list of parameters (see Chapter 13.47.02) all alterable machine functions can be found. The alteration method is described below.

13.47.01 Selecting and altering parameters

Example Setting multiple cutting function

- Switch on the machine.
- Switch to parameter input (LED in the key is not on).

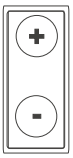

- Select the function group, e.g. "200" with the appropriate plus / minus key.

- Confirm input with Enter.
- Enter the code, see Chapter 11.03 Entering / altering the access code.

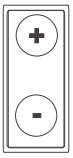

- Select e.g. parameter "207" (multiple cutting) with the appropriate plus / minus key.

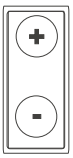

- Switch on the multiple cutting function with the appropriate plus / minus key.

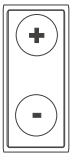

- Select e.g. parameter "208" (knife length and cut overlapping) with the appropriate plus/minus key.

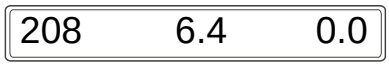

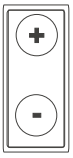

- Select the knife length, e.g. 16.0 mm, with the appropriate plus / minus key.

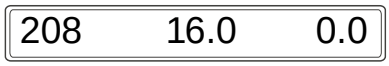

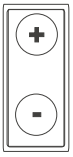

- Select cut overlapping length, e.g. 0.5 mm, with the appropriate plus / minus key.

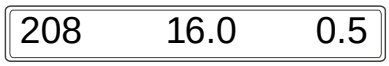

- End parameter input by switching to Sewing mode.

13.46.02 List of parameters

Group	Parameter	Meaning	Setting	Standard value
1	101	Knife suppression permanent (I =OFF, II = ON)	I, II	I
	102	Stop when needle thread error occurs (I =OFF, II = ON)	I, II	I
	103	Display during sewing: (I = buttonhole model, II = speed)	I, II	II
	104	Display software version	-	289/xxx
	105	Type of buttonhole **Single sewing cycle** 1 - Purl seam raised, bartack flat 2 - Flat seam and bartack flat 3 - Purl seam and bartack raised **Double sewing cycle** 1 - Purl seam raised bartack flat 2 - Purl seam and bartack flat 3 - Purl seam and bartack raised 4 - 1st cycle flat seam and bartack flat 2nd cycle purl seam and bartack raised 5 - 1st cycle flat seam and bartack flat 2nd cycle purl seam raised, bartack flat	1 - 5	1
	106	Buttonhole model	1 – 31	1
	107	Maximum speed	500 – 4200	4000
	108	Number of securing seam cycles (only buttonhole model 2)	1-9	1
2	201	Delete variable programs	-	-
	202	Subclass 1: 3119-1/51 and 1/52 2: 3119-2/51 3: 3119-2/53 4: 3119-3/51 5: 3119-4/51	1 - 5	1
	203	PC-connection	-	-
	204	Bobbin thread monitor OFF = 1, ON = II	I, II	I
	205	Needle thread monitor OFF = 1, ON = II	I, II	II
	206	Copy programs	-	-

When a button hole requires multiple cutting action, this is the delay of the knife on the first stroke to get a close cut to the first bartack. (left number in the screen).

When a button hole requires multiple cutting aciton, this is the delay of the knife on the second stroke to get a close cut to the second bartack. (right number in the screen).

Group	Parameter	Meaning	Setting	Standard value
2	207	Multiple cutting OFF = I, ON = II	I, II	I
	208	Enter knife and cut overlapping length of the fitted knife	6.4 – 38.1 0.0 - 4.0	6.4 0.0
	209	Double cycle (stitch divisor) 1 = full no. of stitches per cycle 2 = half no. of stitches per cycle stitch offset from 1st to 2nd cycle	1.2 0.0 – 2.0	1 0.3
	210	Knife release for multiple cut after "cut on" Knife release for single cut after "cut off"	0.0 – 5.0 0.0 – 5.0	0.5 1.6
	211	Number of securing stitches	1 – 3	1
3	301	Program number	1 – 39	1
	302	Cut length (mm)	6.4 – 38.1	12.7
	303	Buttonhole model	1 – 31	1
	304	Distance of left purl seam from centre of cutting line = distance A (mm)	-2.0 to 2.0	0.2
	305	Width of left purl seam = width A (mm)	0.5 – 5.5	1.5
	306	Length of left purl seam (same length as right purl seam) = length A (mm)	1.0 – 48.0	14.8
	307	Number of stitches in left purl seam = number of stitches A	1 – 255	32
	308	Secondary thread tension left purl seam (II = on; I = off)	I, II	I
	309	Width of 1st bar = width B (mm)	1.0 – 5.5	3.4
	310	Second width of 1st bar = width B1 (mm)	0.0 – 5.5	0.0
	311	Length of 1st bar = length B (mm)	1.0 – 6.0	1.2
	312	Second length of 1st bar = length B1 (mm)	0.0 – 6.0	0.0
	313	Number of stitches in 1st bar = number of stitches B	1 – 99	8
	314	Distance of 1st bar to centre of cutting line = distance B (mm)	-2.0 to 2.0	0.0
	315	Secondary thread tension of 1st bar (II = on; I = off)	I, II	II
	316	Distance of right purl seam from cutting line (needle penetration left) = distance C (mm)	-2.0 to 2.0	0.2
	317	Width of right purl seam = width C (mm)	0.5 – 5.5	1.5

Group	Parameter	Meaning	Setting	Standard value
3	318	Length of right purl seam (same length as left purl seam) = length C (mm)	1.0 – 48.0	14.8
	319	Number of stitches in right purl seam = number of stitches C	1 – 255	32
	320	Secondary thread tension right purl seam (II = on; I = off)	I, II	I
	321	Width of 2nd bar = width D (mm)	1.0 – 5.5	3.4
	322	Second width of 2nd bar = width D1 (mm)	0.0 – 5.5	0.0
	323	Length of 2nd bar = length D (mm)	1.0 – 6.0	1.2
	324	Second length of 2nd bar = length D1 (mm)	0.0 – 6.0	0.0
	325	Number of stitches in second bar = number of stitches D	1 – 99	8
	326	Distance of second bar to centre of cutting line = distance D (mm)	-2.0 to 2.0	0.0
	327	Secondary thread tension of 2nd bar (II = on; I = off)	I, II	II
4	401	Delay time for raising clamp	0.00 - 2.00	0.10
	402	Start delay after lowering clamp	0.00 - 1.50	0.20
	403	Cutting time	0.00 - 2.00	0.10
5	501	Soft start stitches	0 - 15	2
	502	Soft start speed	500 - 4200	1500
	503	Reduced speed	500 - 4200	3500
	504	Suppressed stitches needle thread monitor	0 - 15	3
	505	Suppressed stitches bobbin thread monitor	0 - 15	3
6	601	Move stepping motor work clamp and needle		

Group	Parameter	Meaning	Setting	Standard value
6	602	Display inputs (0123456789ABCDEF) **Meaning of the display:** 0 = Error bobbin thread monitor 1 = Error needle thread monitor 2 = Needle in material (NIS) 3 = Reference needle (needle centre) 4 = not assigned (E12) 5 = not assigned (E11) 6 = not assigned (E10) 7 = not assigned (E9) 8 = not assigned (E8) 9 = programmable input 1 (E7) A = programmable input 2 (E6) B = Key for knife suppression on sewing head (E5) C = Basic position knife (E4) D = Clamp lowered (E3) E = Basic position cutter (E2)(Thread scissor) F = Reference clamp (E1)		
6	603	Switch outputs 1 = programmable output 1 2 = Cutter 3 = Secondary thread tension 4 = Knife 5 = programmable output 2 6 = Clamp (1 = ON; 0 = OFF)	1.0	
	604			
	605	Time when needle is in the material	0 - 127	26
	606	Reference point –Needle to work clamp		
	607	Turn sewing motor in direction of sewing		
	608	Carry out cold start		
	609	Reference point – machine to motor		
	610	Reference point – machine to motor 1 = left purl seam, right needle penetration 2 = right purl seam, right needle penetration 3 = right purl seam, left needle penetration 4 = left purl seam, left needle penetration	1 - 4	
7	701	P-quota speed controller	1 -50	10
	702	I-quota speed controller	0 - 100	50

Set the take-up to stop at final position 2 mm before top dead center

Group	Parameter	Meaning	Setting	Standard value
7	703	P-quota position controller	1 - 50	20
	704	D-quota position controller	1 - 100	30
	705	Time for position controller	0 - 100	25
	706	P-quota position controller for rest brake	1 - 50	25
	707	D-quota position controller for rest brake	1 - 50	15
	708	Maximum moment for rest brake	1 - 50	0
	709	Minimum machine speed	3 - 64	6
	710	Maximum machine speed	1 - 100	45
	711	Maximum motor speed	1 - 100	45
	712	Positioning speed	3 - 25	25
	713	Acceleration ramp	1 - 50	35
	714	Brake ramp	1 - 50	30
	715	Reference position	0 - 127	26
	716	Time-out	0 - 255	40
	717	Starting current motor	3 - 10	5
	718	Anti-vibration filter	1 - 10	3
	719	Rotation direction allocation	0 - 1	1
	720	Reserved (do not change!)	0 - 127	64
8	801	Right of access function group 100	0 - 1	0
	802	Right of access function group 200	0 - 1	1
	803	Right of access function group 300	0 - 1	1
	804	Right of access function group 400	0 - 1	1
	805	Right of access function group 500	0 - 1	1
	806	Right of access function group 600	0 - 1	1
	807	Right of access function group 700	0 - 1	1
	808	Right of access function group 800	0 - 1	1
	809	Right of access keys maximum speed	0 - 1	0
	810	Right of access key cutting length	0 - 1	0

Group	Parameter	Meaning	Setting	Standard value
8	811	Right of access key piece counter	0 - 1	0
	812	Right of access key reverse counter	0 - 1	0
	813	Right of access program key	0 - 1	0
	814	Right of access program key 2	0 - 1	0
	815	Right of access program key 3	0 - 1	0
	816	Right of access key buttonhole width	0 - 1	0
	817	Right of access key cutting width	0 - 1	0
	818	Right of access key double sewing cycle	0 - 1	0
	819	Enter access code	0 to 9999	3119

13.48 Error messages

Error 1:	System fault in the control unit
Error 2:	Error on sewing motor (with error code)
Error 3:	Knife control (e.g. mechanically locked)
Error 4:	Cutter control
Error 5:	Lift control of work clamp
Error 6:	Time control when working through the sewing program
Error 7:	Ramp end of stepping motor
Error 8:	Stitch length too large
Error 9:	Sewing pattern outside area
Error 10:	Error when moving the machine into basic position (Home)
Error 11:	Stepping frequency of the stepping motor is too high
Error 12:	Error in sewing program
Error 13:	Sewing area larger than the work clamp cutout
Error 14:	Programmable output not activated
Error 15:	Programmable input did not arrive
Error 16:	Delay time when the sewing drive is running not permitted
Error 17:	Cutting before previous sewing
Error 18:	Incorrect command in data set
Error 19:	Wrong program number
Error 20:	Needle thread breakage or needle thread inserted incorrectly
Error 21:	Power unit overload (24 V)
Error 22:	Incorrect mains voltage
Error 23:	24V power unit too low
Error 24:	No stepping motor motion prepared
Error 25:	Stepping motor was not started
Error 26:	Incorrect knife length for multiple cutting

14.01 Wearing parts

This list indicates the most important wearing parts.
You can request a detailed parts list for the complete machine under parts number 296-12-18 342.

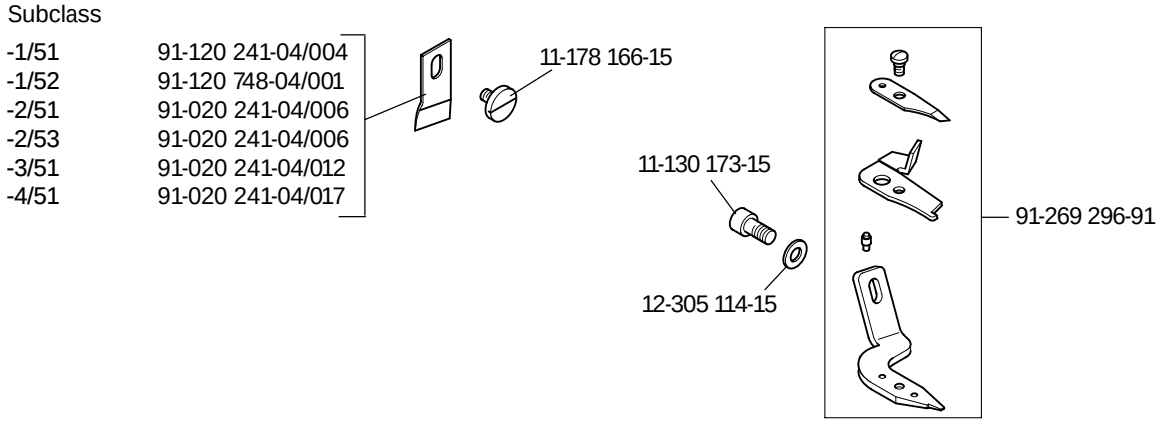

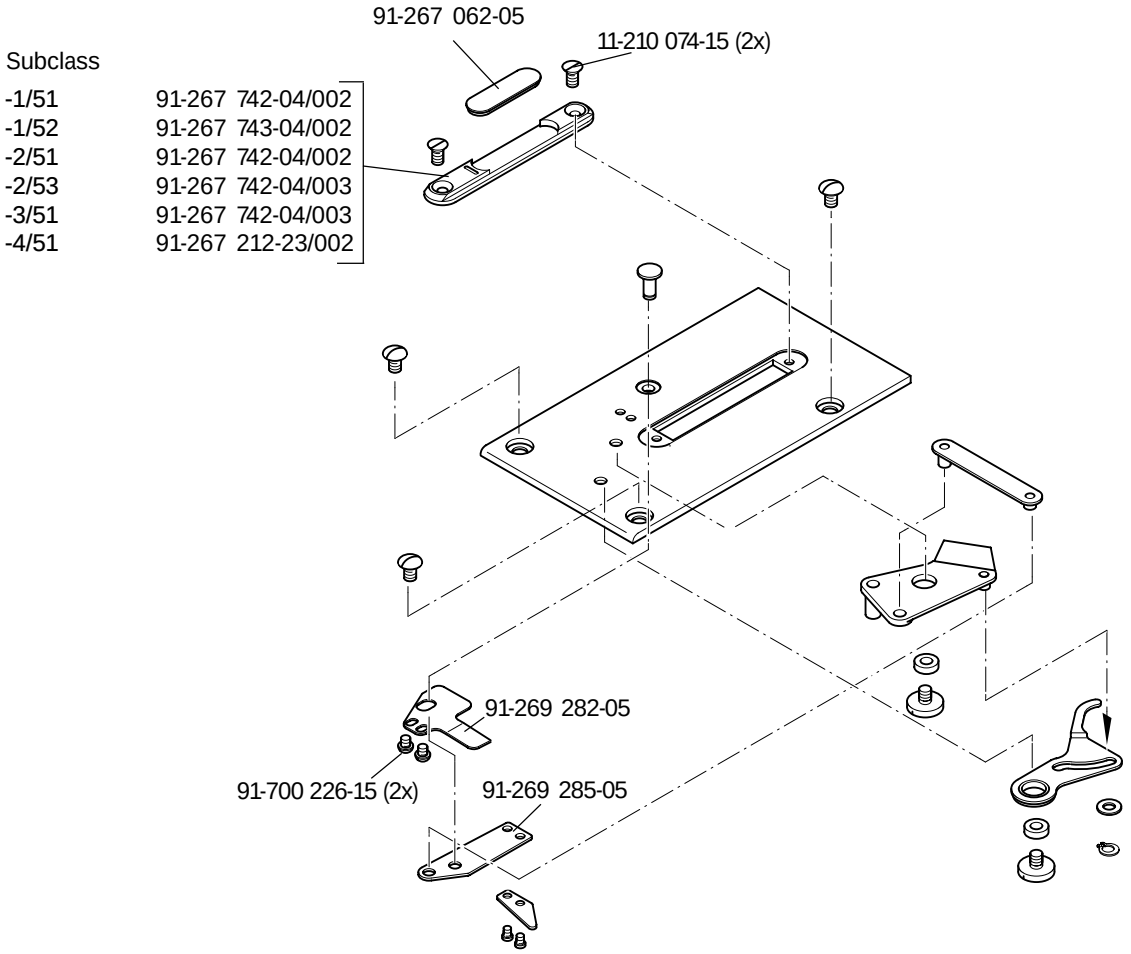

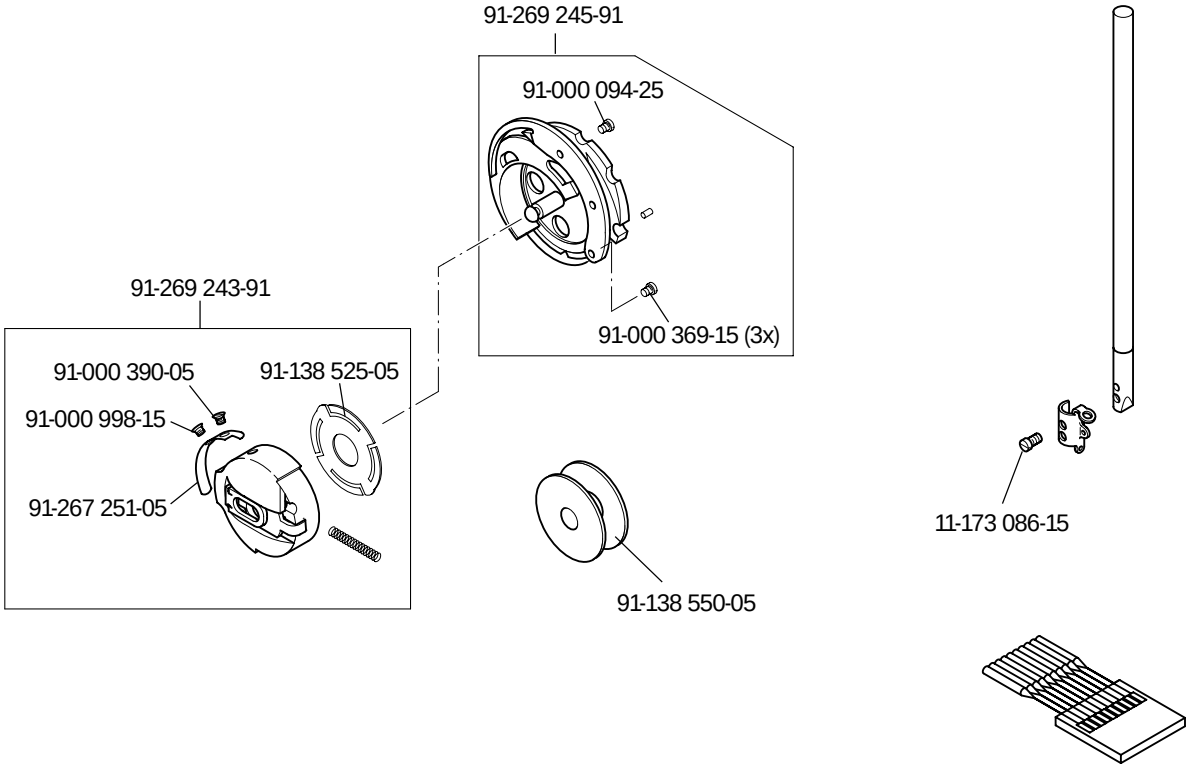
91-269 245-91
91-000 094-25
91-000 369-15 (3x)
91-269 243-91
91-000 390-05
91-138 525-05
91-000 998-15
91-267 251-05
91-138 550-05
11-173 086-15

System 438

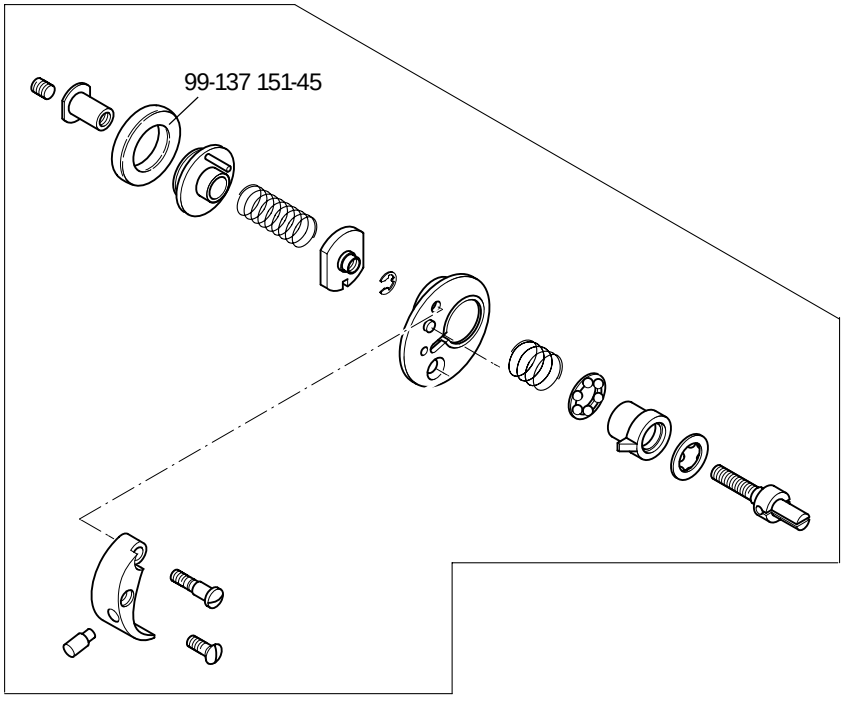
99-137 151-45

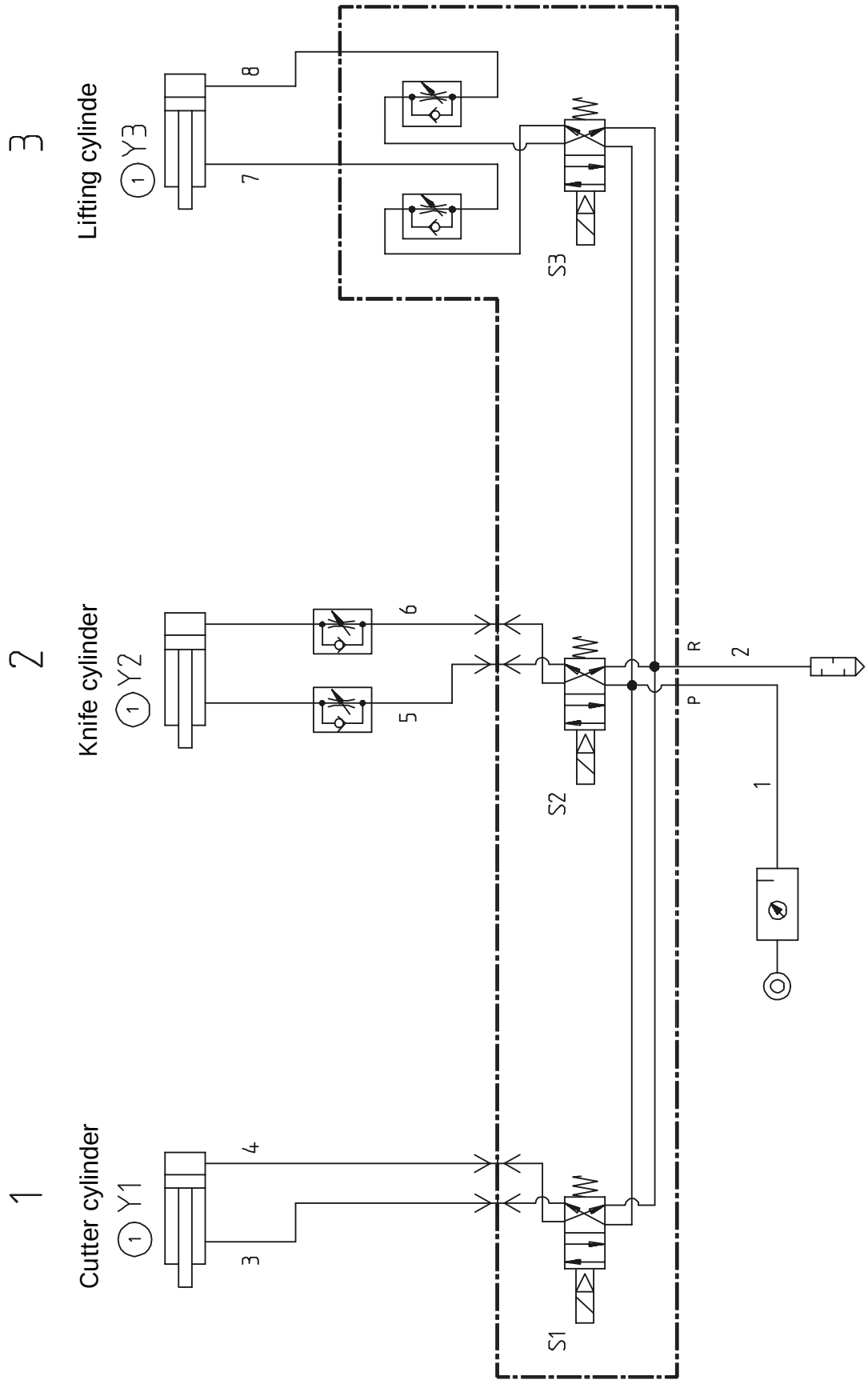
3
Lifting cylinde
Y3
8
7
S3
2
Knife cylinder
Y2
6
5
S2
R
2
P
1
1
Cutter cylinder
Y1
4
3
S1

Reference list for the circuit diagrams

A1	Quick controller
A2	OC TOP control panel
A3	Basic position needle pendulum
B1	Thread sensor
H1	Sewing lamp
M1	Sewing motor
M2	Stepping motor needle
MS	Stepping motor work clamp
Q1	On/off switch

Inputs

S1	Command sender foot pedal
S2	Reference work clamp
S3	Work clamp lowered
S4	Basic position cutter
S5	Basic position knife
S6	Knife suppression

Outputs

Y1	Work clamp
Y2	Knife on
Y3	Cutter
Y4	Voltage

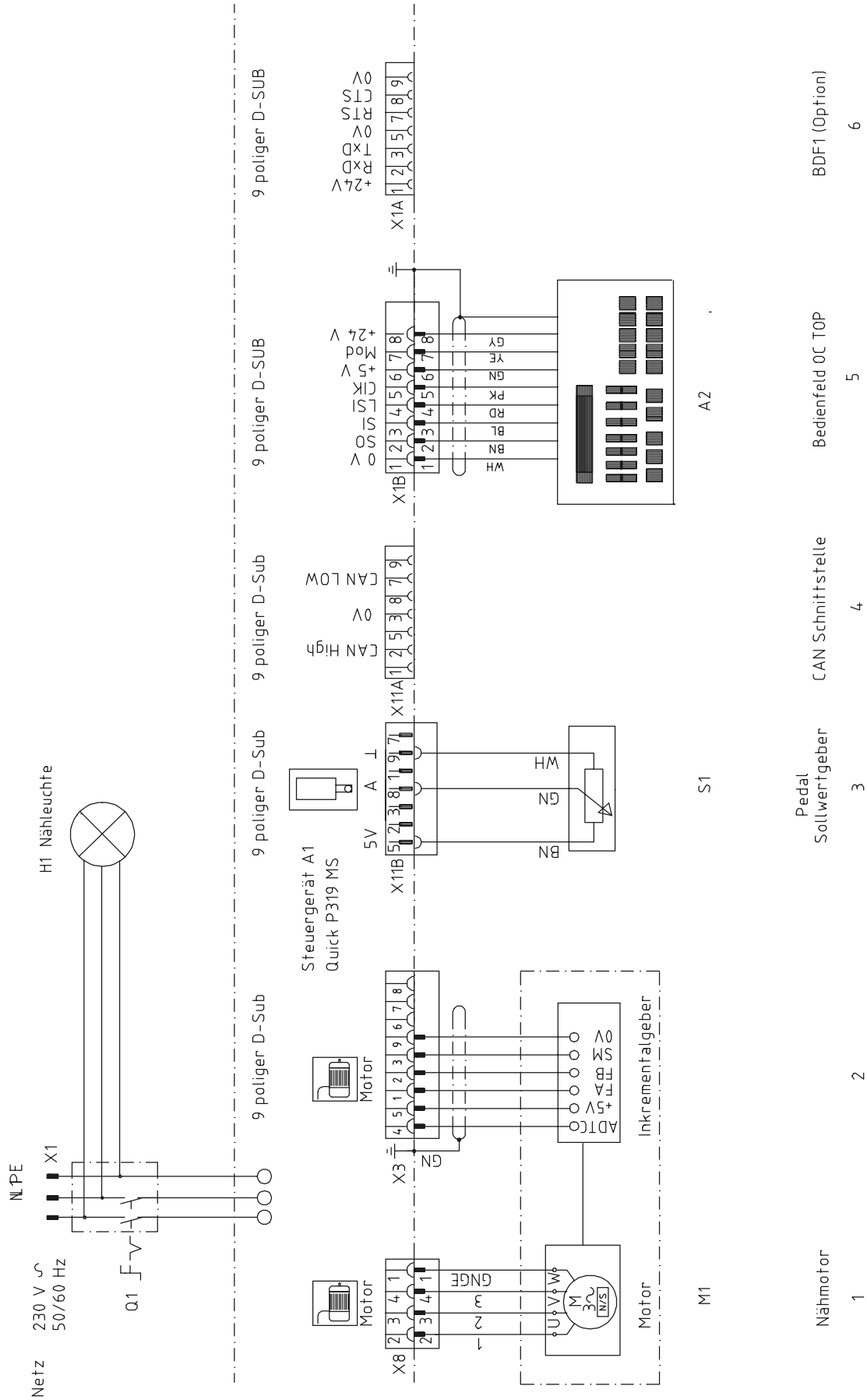
Netz
230 V ~
50/60 Hz
Q1
X1
H1 Nähleuchte
9 poliger D-SUB
9 poliger D-Sub
Steuergerät A1
Quick P319 MS
X8
X3
X11B
X11A
X1B
X1A
Motor
GNGE
GN
5V
A
CAN High
0V
CAN LOW
0 V
SO
SI
LSI
CIK
+5 V
Mod
+24 V
+24V
RxD
TxD
0V
RTS
CTS
0V
WH
BN
BL
RD
PK
GN
YE
GY
Inkrementalgeber
ADTC
+5V
FA
FB
SM
0V
M1
S1
A2
Nähmotor
1
Pedal
Sollwertgeber
3
CAN Schnittstelle
4
Bedienfeld OC TOP
5
BDF1 (Option)
6

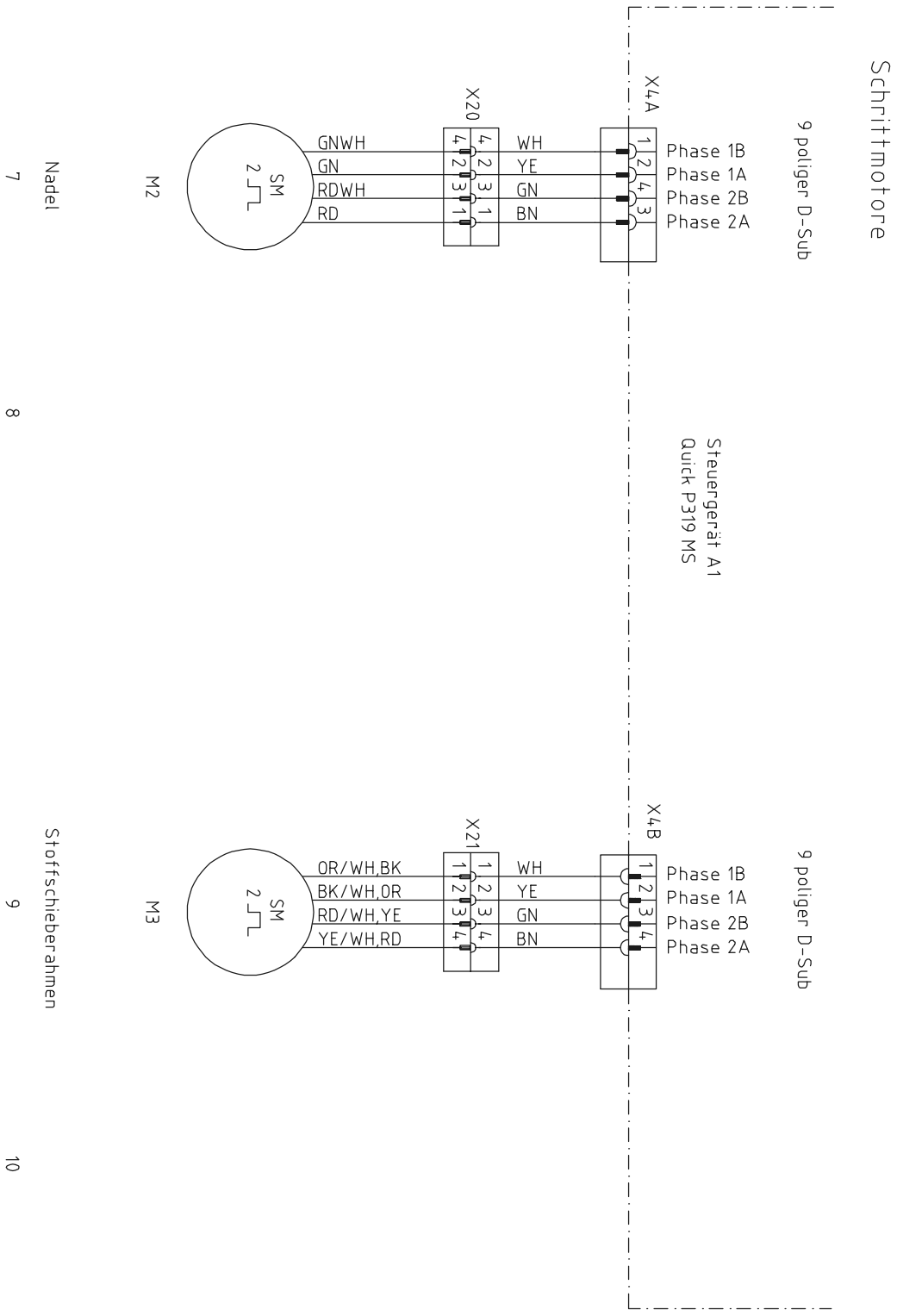
Schrittmotore
Steuergerät A1
Quick P319 MS
X4A
9 poliger D-Sub
Phase 1B
Phase 1A
Phase 2B
Phase 2A
X20
GNWH
GN
RDWH
RD
WH
YE
GN
BN
M2
SM
Nadel
7
8
X4B
9 poliger D-Sub
Phase 1B
Phase 1A
Phase 2B
Phase 2A
X21
OR/WH,BK
BK/WH,OR
RD/WH,YE
YE/WH,RD
WH
YE
GN
BN
M3
SM
Stoffschieberahmen
9
10

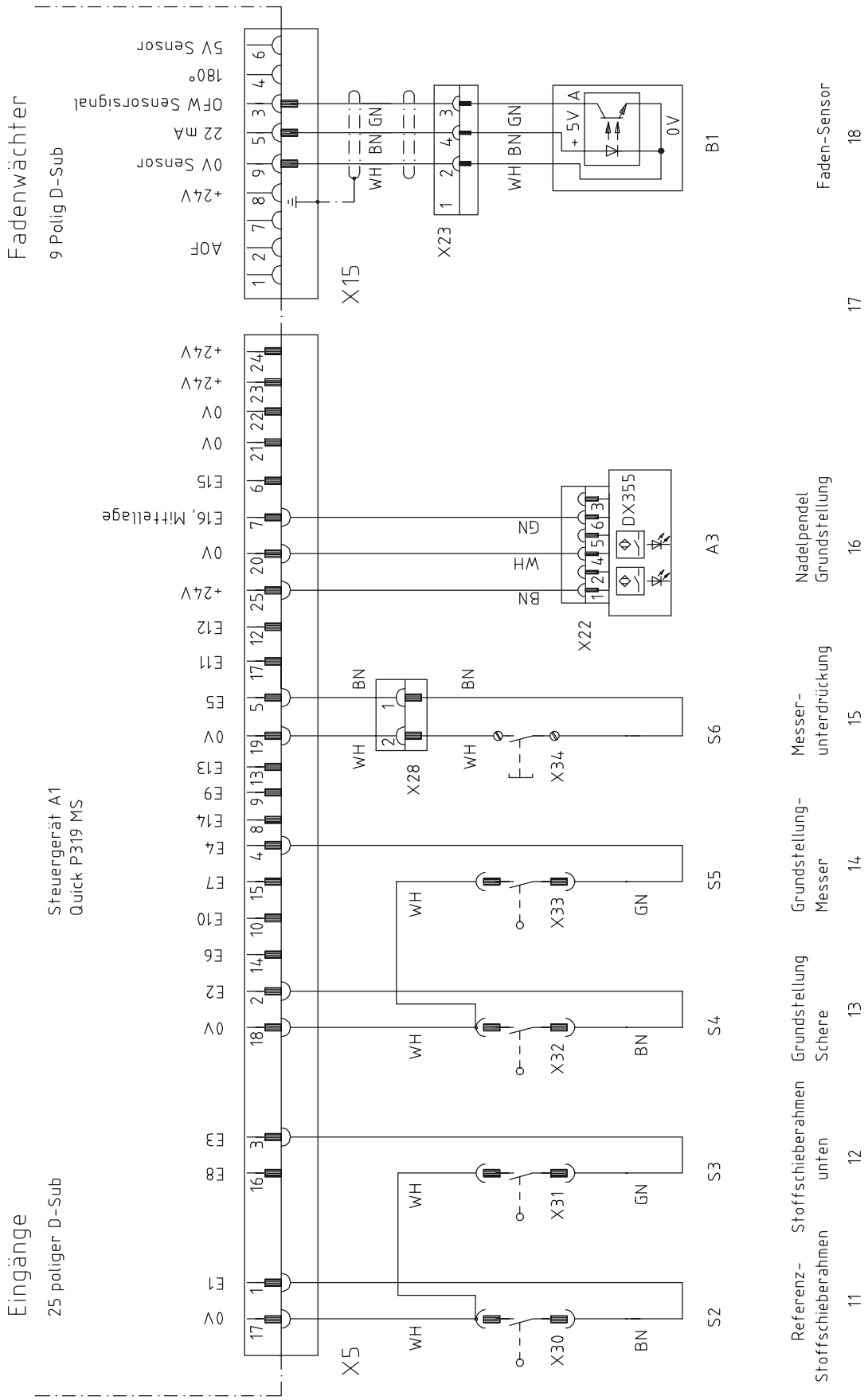
Fadenwächter
9 Polig D-Sub
5V Sensor
180°
OFW Sensorsignal
22 mA
0V Sensor
+24V
AOF
X15
X23
WH BN GN
+ 5V A
0V
B1
Faden-Sensor
17
18
Eingänge
25 poliger D-Sub
Steuergerät A1
Quick P319 MS
X5
0V
E1
E8
E3
0V
E2
E6
E10
E7
E4
E14
E9
E13
0V
E5
E11
E12
+24V
0V
E16, Mittellage
E15
0V
0V
+24V
+24V
X22
BN
WH
GN
DX355
A3
Nadelpendel
Grundstellung
16
X28
X34
S6
Messer-
unterdrückung
15
X33
S5
Grundstellung-
Messer
14
X32
S4
Grundstellung
Schere
13
X31
S3
Stoffschieberahmen
unten
12
X30
S2
Referenz-
Stoffschieberahmen
11

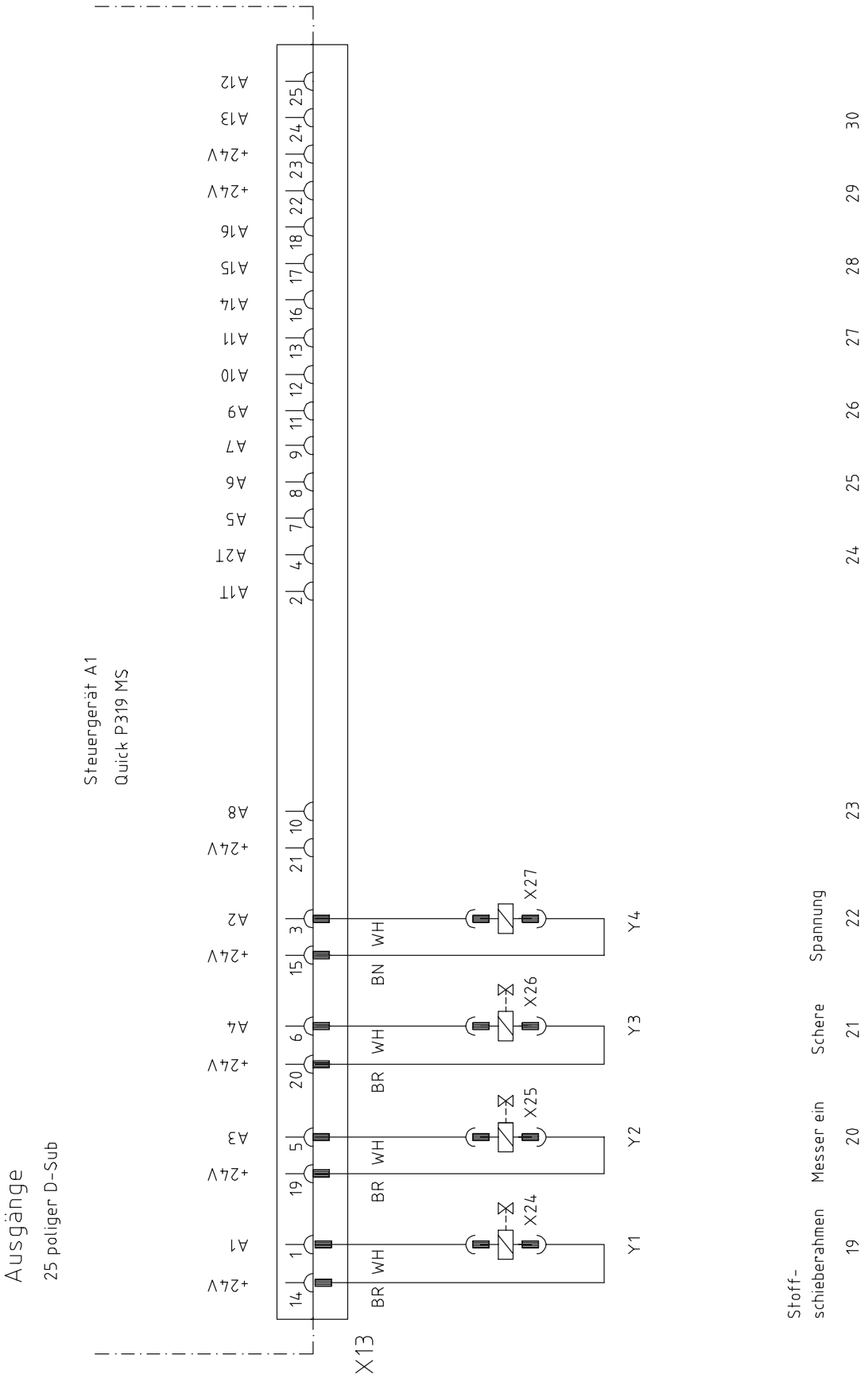
Ausgänge
25 poliger D-Sub
Steuergerät A1
Quick P319 MS
X13
A12
A13
+24V
+24V
A16
A15
A14
A11
A10
A9
A7
A6
A5
A2T
A1T
A8
+24V
A2
+24V
A4
+24V
A3
+24V
A1
+24V
14 1 19 5 20 6 15 3 21 10 2 4 7 8 9 11 12 13 16 17 18 22 23 24 25
BR WH BR WH BR WH BN WH
X24 X25 X26 X27
Y1 Y2 Y3 Y4
Stoff-
schieberahmen Messer ein Schere Spannung
19 20 21 22 23
24 25 26 27 28 29 30

To check the symmetrical positions of the needle

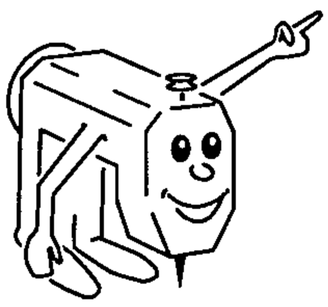

Notice

Use a piece of paper like a calling card

Go to parameter 606 and with the foot down

set parameter to 0, -40, and +40 and do the

needle penetrations.

Be sure to set parameter 606 back to (0)

PFAFF

G.M. PFAFF KAISERSLAUTERN
INDUSTRIEMASCHINEN AG

Postfach 3020
D-67653 Kaiserslautern

Königstr. 154
D-67655 Kaiserslautern

Telefon: (0631) 200-0
Telefax: (0631) 17202
E-Mail: info@pfaff-industrial.com

Gedruckt in der BRD
Printed in Germany
Imprimé en R.F.A.
Impreso en la R.F.A.

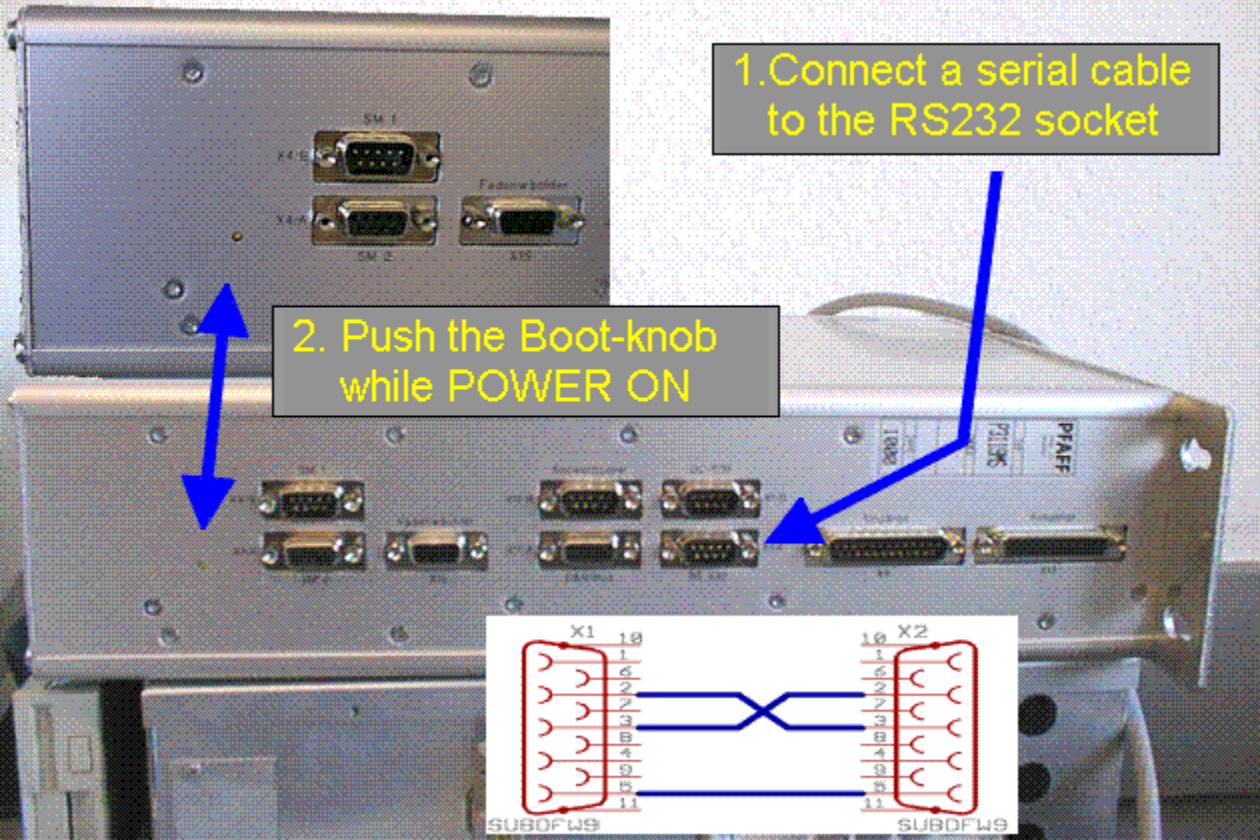
1.Connect a serial cable to the RS232 socket
2. Push the Boot-knob while POWER ON
X1
X2
SUBDFW9
SUBDFW9

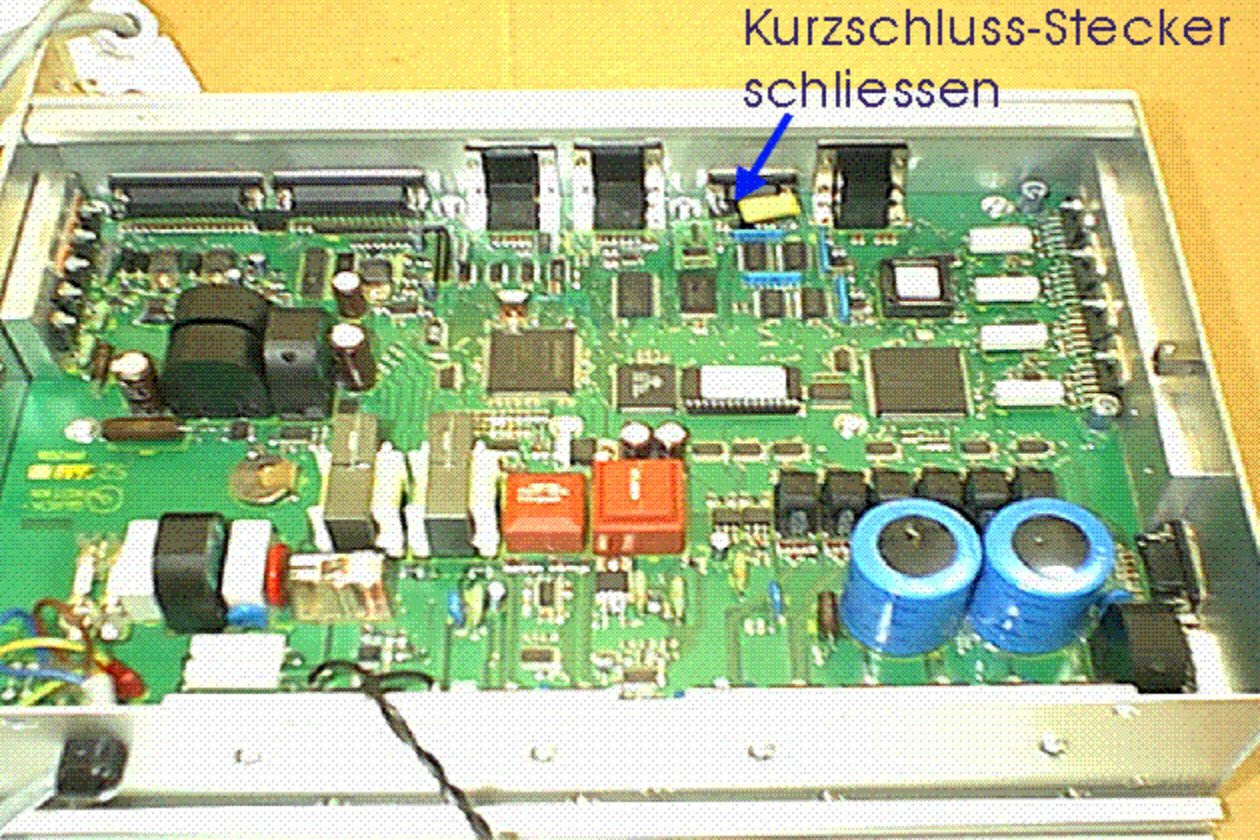
Kurzschluss-Stecker
schliessen