PFAFF

3834 -14/11 -14/31

Instruction Manual

This instruction manual applies to machines from the following serial numbers onwards:

2733153 →

296-12-18 936/001
Betriebsanleitung engl. 02.06

This Instruction manual is valid for all models and subclasses listed in the chapter "Specifications".

The reprinting, copying or translation of PFAFF Instruction Manuals, whether in whole or in part, is only permitted with our previous authorization and with written reference to the source.

PFAFF Industrie Maschinen AG

Postfach 3020
D-67653 Kaiserslautern

Königstr. 154
D-67655 Kaiserslautern

Contents ..... Chapter - Page

1	**Safety**	1 - 1
1.01	Directives	1 - 1
1.02	General notes on safety	1 - 1
1.03	Safety symbols	1 - 2
1.04	Important points for the user	1 - 2
1.05	Operating and specialist personnel	1 - 3
1.05.01	Operating personnel	1 - 3
1.05.02	Specialist personnel	1 - 3
1.06	Danger	1 - 4
2	**Proper use**	2 - 1
3	**Specifications**	3 - 1
3.01	PFAFF 3834-14/11 and -14/31	3 - 1
3.02	Model, needle and thread	3 - 1
4	**Disposal of machine**	4 - 1
5	**Transport, packaging and storage**	5 - 1
5.01	Transportation to customer's premises	5 - 1
5.02	Transport within the customer's premises	5 - 1
5.03	Disposal of the packaging	5 - 1
5.04	Storage	5 - 1
6	**Explanation of the symbols**	6 - 1
7	**Controls**	7 - 1
7.01	On/Off switch	7 - 1
7.02	Pedal	7 - 2
7.03	Machine head keys	7 - 1
7.04	Knee switch	7 - 3
7.05	Lever for raising the roller presser	7 - 3
7.06	Control panel	7 - 4
8	Mounting and commissioning the machine	8 - 1
8.01	Mounting	8 - 1
8.01.01	Adjusting the table-top height	8 - 1
8.01.02	Fitting the tilt lock	8 - 2
8.01.03	Fitting the machine cover	8 - 2
8.02	Mounting the flange motor	8 - 3
8.02.01	Mounting the flange motor to the bearing plate	8 - 3
8.02.02	Mounting the flange motor to the machine	8 - 3
8.02.03	Connecting the plug-in connections and earth cables	8 - 4
8.02.04	Mounting the toothed belt / Basic setting of the machine drive	8 - 5
8.02.05	Mounting the belt guard of the flange motor	8 - 7
8.02.06	Connecting the safety switch	8 - 7
8.02.07	Checking the function of the start inhibitor	8 - 8
8.03	Mounting the spool holder	8 - 9

Contents ..... Chapter - Page

8.04 Commissioning the machine ..... 8 - 9
8.03 Turning the machine on/off ..... 8 - 9

9 Preparation ..... 9 - 1
9.01 Inserting the needle ..... 9 - 1
9.02 Winding the bobbin thread, adjusting the thread tension ..... 9 - 2
9.03 Removing/inserting the bobbin case ..... 9 - 3
9.04 Threading the bobbin case / Adjusting the bobbin thread tension ..... 9 - 3
9.05 Threading the needle thread / Adjusting the needle thread tension ..... 9 - 4
9.06 Setting the needle thread function ..... 9 - 5
9.07 Selecting the program number ..... 9 - 6
9.08 Setting the stitch lengths ..... 9 - 7
9.09 Entering the fullness area for the pedal adjustment ..... 9 - 8
9.10 Entering the start and end backtacks ..... 9 - 9
9.11 Switching on / adjusting the bobbin thread control with the stitch count function ..... 9 - 10
9.12 Entering / altering the code number ..... 9 - 12
9.13 Adjusting the control panel ..... 9 - 14

10 Sewing ..... 10 - 1
10.01 Manual sewing ..... 10 - 1
10.02 Sewing with fixed programs ..... 10 - 3
10.03 Programmed sewing ..... 10 - 5
10.03.01 Fullness adjustment ..... 10 - 7
10.03.02 Selecting the garment size ..... 10 - 7
10.03.03 Program interruption ..... 10 - 8
10.04 Error messages ..... 10 - 8

11 Input ..... 11 - 1
11.01 Seam program input ..... 11 - 2
11.01.01 Basic settings for seam program input ..... 11 - 2
11.01.02 Seam program input with the "Creating/adjusting a program" function ..... 11 - 4
11.01.03 Seam program input with the "Teach-in" function ..... 11 - 6
11.02 Examples of how to create seam programs ..... 11 - 8
11.02.01 Example of a seam program input using the "Creating/adjusting a program" function ..... 11 - 8
11.02.02 Example of a seam program input using the "Teach in" function ..... 11 - 10
11.03 Seam program administration ..... 11 - 15

12 Care and Maintenance ..... 12 - 1
12.01 Cleaning ..... 12 - 1
12.02 Oiling the hook ..... 12 - 2
12.03 Checking the oil levels ..... 12 - 2
12.04 Lubricating the bevel gears ..... 12 - 3

13 Adjustment ..... 13 - 1
13.01 Notes on adjustment ..... 13 - 1
13.02 Tools, gauges and other accessories ..... 13 - 1
13.03 Abbreviations ..... 13 - 1

Contents ..... Chapter - Page

13.04	Adjusting the basic machine	13 - 2
13.04.01	Positioning the needle in the direction of sewing	13 - 2
13.04.02	Positioning the needle across the direction of sewing	13 - 3
13.04.03	Preadjusting the needle height	13 - 4
13.04.04	Needle rise, hook-to-needle clearance, needle height and needle guard	13 - 5
13.04.05	Height and stroke of the bobbin case opener	13 - 7
13.04.06	Height of the feed wheel	13 - 8
13.04.07	Clearance between roller presser and feed wheel	13 - 9
13.04.08	Roller presser	13 - 10
13.04.09	Puller (only on the PFAFF 3834-14/31)	13 - 11
13.04.10	Roller presser height level switch	13 - 12
13.04.11	Automatic presser foot lift	13 - 13
13.04.12	Retainer	13 - 14
13.04.13	Thread check spring	13 - 15
13.04.14	Bobbin winder	13 - 16
13.04.15	Roller presser pressure	13 - 17
13.04.16	Locking the set value transmitter	13 - 18
13.04.17	Lubrication	13 - 19
13.04.18	Re-engage safety coupling	13 - 20
13.05	Adjusting the thread trimmer –900/81	13 - 21
13.05.01	Resting position of the roller lever / radial position of the control cam	13 - 22
13.05.02	Position of the thread catcher holder	13 - 23
13.05.03	Distance between thread catcher and needle plate	13 - 24
13.05.04	Position of the thread catcher	13 - 25
13.05.05	Knife position and knife pressure	13 - 26
13.05.06	Bobbin thread retaining spring	13 - 27
13.05.07	Manual cutting test	13 - 28
13.06	Parameter settings	13 - 29
13.06.01	Overview of the parameter functions	13 - 29
13.06.02	Example of a parameter input	13 - 30
13.06.03	List of parameters	13 - 31
13.07	Explanation of the error messages	13 - 32
13.08	Warning messages	13 - 33
13.09	Carry out a cold start	13 - 34
13.10	Internet update of the machine software	13 - 35
13.11	Service menu	13 - 36
14	Wearing parts	14 - 1
15	Circuit diagrams	15 - 1

1 Safety

1.01 Directives

This machine is constructed in accordance with the European regulations contained in the conformity and manufacturer's declarations.
In addition to this Instruction Manual, also observe all generally accepted, statutory and other regulations and legal requirements and all valid environmental protection regulations!
The regionally valid regulations of the social insurance society for occupational accidents or other supervisory organizations are to be strictly adhered to!

1.02 General notes on safety

- This machine may only be operated by adequately trained operators and only after having completely read and understood the Instruction Manual!
- All Notes on Safety and Instruction Manuals of the motor manufacturer are to be read before operating the machine!
- The danger and safety instructions on the machine itself are to be followed!
- This machine may only be used for the purpose for which it is intended and may not be operated without its safety devices. All safety regulations relevant to its operation are to be adhered to.
- When exchanging sewing tools (e.g. needle, roller presser, needle plate and bobbin), when threading the machine, when leaving the machine unattended and during maintenance work, the machine is to be separated from the power supply by switching off the On/Off switch or by removing the plug from the mains!
- Everyday maintenance work is only to be carried out by appropriately trained personnel!
- Repairs and special maintenance work may only be carried out by qualified service staff or appropriately trained personnel!
- Work on electrical equipment may only be carried out by appropriately trained personnel!
- Work is not permitted on parts and equipment which are connected to the power supply! The only exceptions to this rule are found in the regulations EN 50110.
- Modifications and alterations to the machine may only be carried out under observance of all the relevant safety regulations!
- Only spare parts which have been approved by us are to be used for repairs!
  We expressly point out that any replacement parts or accessories which are not supplied by us have not been tested and approved by us. The installation and/or use of any such products can lead to negative changes in the structural characteristics of the machine. We are not liable for any damage which may be caused by non-original parts.

1.03 Safety symbols

Danger!
Points to be observed.

Danger of injury for operating and specialist personnel!

Caution

Do not operate without finger guard and safety devices. Before threading, changing bobbin and needle, cleaning etc. **switch off main switch.**

1.04 Important points for the user

- This Instruction Manual is an integral part of the machine and must be available to the operating personnel at all times.
  The Instruction Manual must be read before operating the machine for the first time.
- The operating and specialist personnel is to be instructed as to the safety equipment of the machine and regarding safe work methods.
- It is the duty of the user to only operate the machine in perfect running order.
- It is the obligation of the user to ensure that none of the safety mechanisms are removed or deactivated.
- It is the obligation of the user to ensure that only authorized persons operate and work on the machine.

Further information can be obtained from your PFAFF agent.

1.05 Operating and specialist personnel

1.05.01 Operating personnel

Operating personnel are persons responsible for the equipping, operating and cleaning of the machine as well as for taking care of problems arising in the sewing area.

The operating personnel is required to observe the following points and must:

- always observe the Notes on Safety in the Instruction Manual!
- never use any working methods which could adversely affect the safety of the machine!
- not wear loose-fitting clothing or jewelery such as chains or rings!
- also ensure that only authorized persons have access to the potentially dangerous area around the machine!
- always immediately report to the person responsible any changes in the machine which may limit its safety!

1.05.02 Specialist personnel

Specialist personnel are persons with a specialist education in the fields of electrics, electronics and mechanics. They are responsible for the lubrication, maintenance, repair and adjustment of the machine.

The specialist personnel is obliged to observe the following points and must:

- always observe the Notes on Safety in the Instruction Manual!
- switch off the On/Off switch before carrying out adjustments or repairs, and ensure that it cannot be switched on again unintentionally!
- never work on parts which are still connected to the power supply! Exceptions are explained in the regulations EN 50110.
- replace the protective coverings afer all repairs or maintenance work and close the electrical control box after all repairs or maintenance work!

1.06 Danger

A working area of **1 meter** is to be kept free both in front of and behind the machine while it is in operation so that it is always easily accessible.

Never reach into the sewing area while sewing!
Danger of injury by the needle!

Never leave objects on the table while adjusting the machine settings!
Objects can become trapped or be slung away!
Danger of injury!

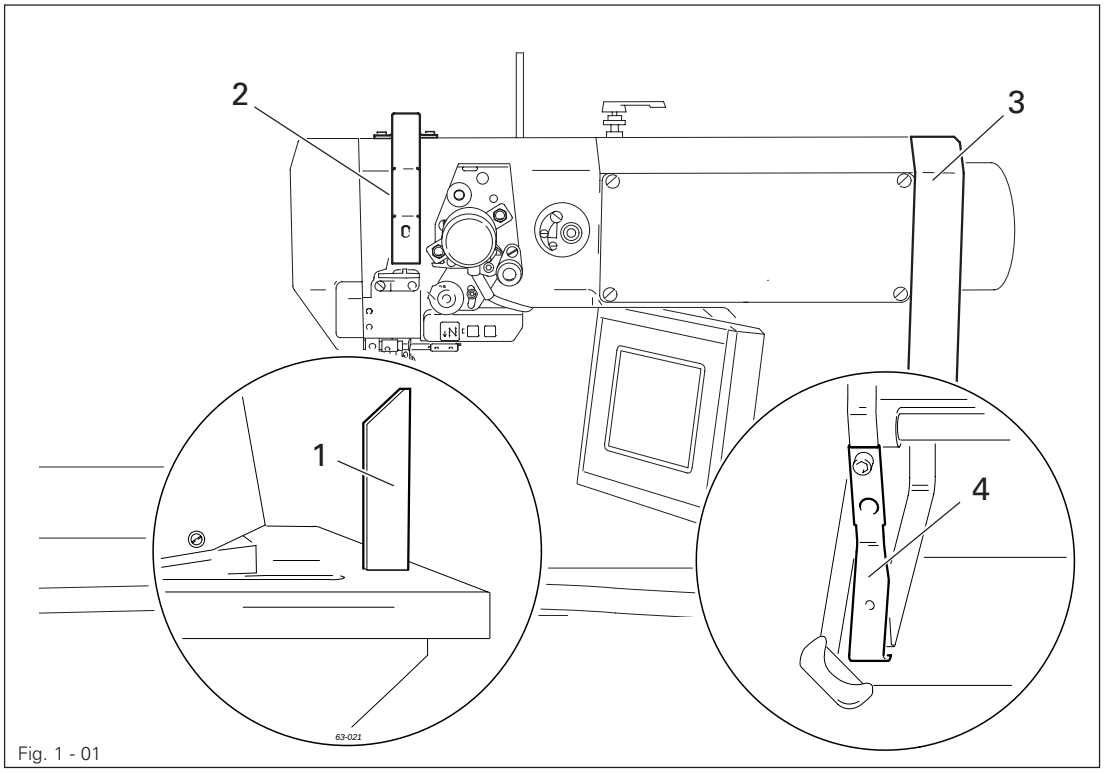

Fig. 1 - 01

Do not operate the machine without support **1**!
Danger due to top-heavy sewing head!
Machine can tip over backwards when tilted!

Do not operate the machine without its take-up lever guard **2**!
Danger of injury due to the motion of the take-up lever!

Do not operate the machine without belt guard **3**!
Danger of injury by rotating drive belt!

Do not operate the machine without tilt lock **4**!
Danger of crushing between sewing head and table!

2 Proper use

The **PFAFF 3834-14/11** is a high-speed, single needle, postbed sewing machine (post to the right of the needle) with forwards and reverse feeding feed-wheel .

The **PFAFF 3834-14/31** is a high-speed, single needle, postbed sewing machine (post to the right of the needle) with forwards and reverse feeding feed-wheel and driven puller.

This machine is used for sewing lockstitch seams in the clothing industry.

Any and all uses of this machine which have not been approved of by the manufacturer are considered to be inappropriate! The manufacturer cannot be held liable for any damage caused by the inappropriate use of the machine! The appropriate use of the machine includes the observance of all operational, adjustment, maintenance and repair measures required by the manufacturer!

3 Specifications

3.01 PFAFF 3834-14/11 und -14/31 ▲

Stitch type: ..... 301 (lockstitch)

Fabric clearance: ..... 9 mm
Clearance width: ..... 245 mm
Clearance height: ..... 115 mm
Post height: ..... 180 mm

Dimensions of sewing head:
Length: ..... approx. 615 mm
Width: ..... approx. 240 mm
Height (above table): ..... approx. 500 mm
Bedplate: ..... 518 x 177 mm

Max. speed: ..... 3500 spm ◆

Electrical data:
Operating voltage: ..... 230 V ± 10%, 50/60 Hz, alternating voltage
Max. output: ..... 1.2 kVA
Fuse protection: ..... 1 x 16 A, delayed action

Noise data:
Noise emission level at workplace with a sewing speed of 2700 spm: ..... L_{pA} < 80 dB(A) ■
(Noise measurement in accordance with DIN 45 635-48-A-1, ISO 11204, ISO 3744, ISO 4871)

Net weight of machine head: ..... approx. 61 kg
Gross weight of machine head: ..... approx. 71 kg

▲ Subject to alternation

◆ Varies according to material, work process and stitch length

■ K_{pA} = 2,5 dB

3.02 Model, needle and thread

Type of model: ..... A
Needle system: 134-35
Needle thickness in 1/100 mm: 80
Thread thickness: 120

4 Disposal of machine

- The proper disposal of the machine is the responsibility of the customer.
- The materials used in the machines are steel, aluminium, brass and various plastics. The electrical equipment consists of plastics and copper.
- The machine is to be disposed of in accordance with the locally valid environmental protection regulations. If necessary, a specialist is to be commissioned.

Special care is to be taken that parts soiled with lubricants are separately disposed of in accordance with the locally valid pollution control regulations!

5 Transport, packaging and storage

5.01 Transportation to customer's premises

All machines are delivered completely packed.

5.02 Transport within the customer's premises

The manufacturer bears no liability for transport within the customer's premises or to the individual locations of use. Always ensure that the machine is only transported upright.

5.03 Disposal of the packaging

The packaging of these machines consists of paper, cardboard and VCE fiber. The proper disposal of the packaging is the responsibility of the customer.

5.04 Storage

The machine can be stored for up to 6 months if not in use. During this time it should be protected from dust and moisture.
For longer storage the individual parts of the machine, especially the moving parts, should be protected against corrosion, e.g. by a film of oil.

6 Explanation of the symbols

In the following section of this Instruction Manual, certain tasks or important pieces of information are accentuated by symbols.
The symbols used have the following meanings:

Note, information

Cleaning, care

Lubrication, greasing

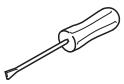

Servicing, repairing, adjustment, maintenance
(only to be carried out by specialist personnel)

Controls

7.01 On/Off switch

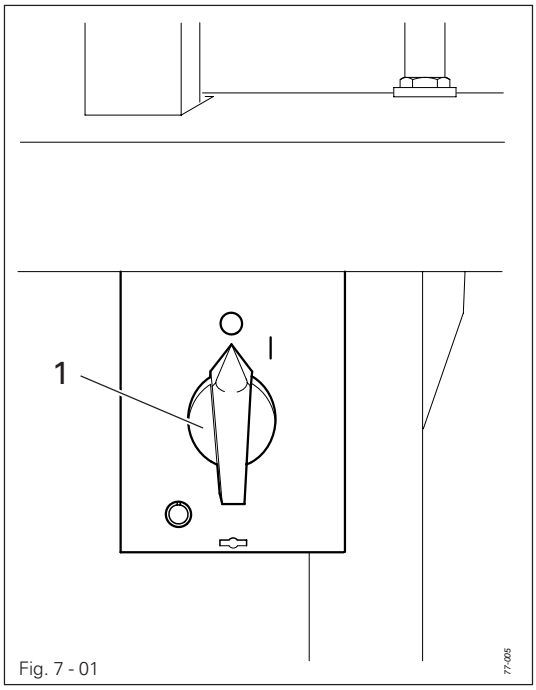

Fig. 7 - 01

- Turn the machine on/off by turning On/Off switch **1**.

7.02 Pedal

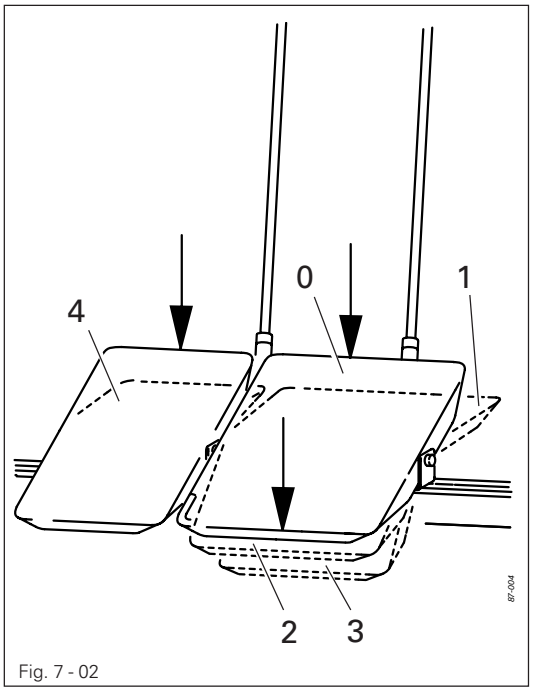

Fig. 7 - 02

0 = Neutral position

1 = Sewing

2 = Raise roller presser

3 = Cut sewing thread and raise roller presser

1 + 4 = Apply variable amount of fullness

The current fullness is shown on a bar diagram on the display of the control panel.

7.03 Machine head keys

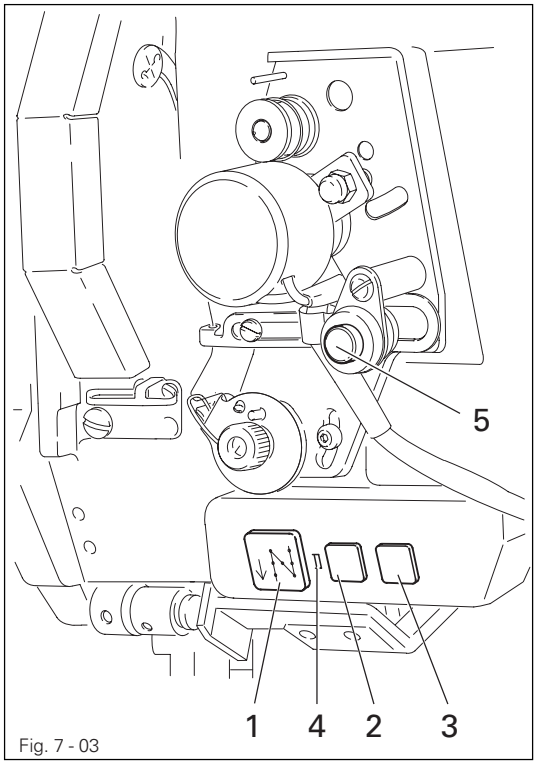

Fig. 7 - 03

- When the respective key is operated, a certain function is carried out.

Key **1**: Sewing in reverse
As long as the key is operated, the feed direction is reversed.

Key **2**: The roller presser feed stroke is reduced by pressing this key.

Key **3**: The roller presser feed stroke is increased by pressing this key.

Diode **4**: Diode **4** flashes when the pre-selected number of stitches for the bobbin thread control has been reached, see **Chapter 9.11 Setting the bobbin thread control with the stitch count function.**

Key **5**: The thread tension is released by pressing key **5**.

7.04 Knee switch

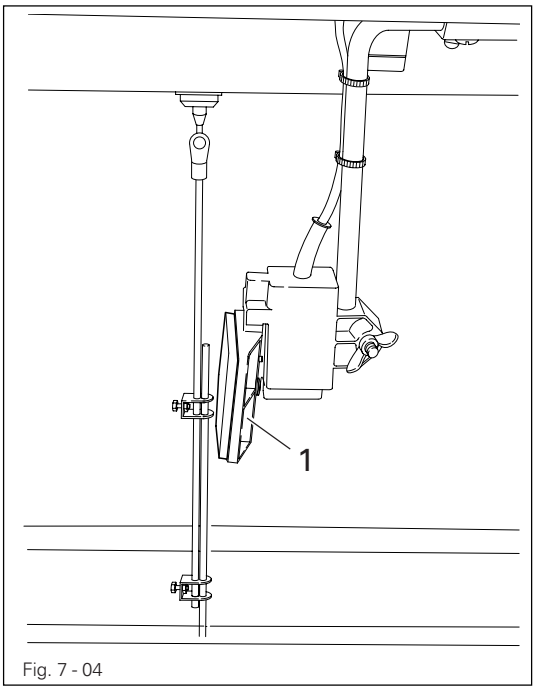

Fig. 7 - 04

- By operating the knee switch **1**, in the fixed programs and in **programmed sewing** it is possible to signal the end of the seam section.

To make it possible to switch to the next seam section in programmed sewing, parameter "201" must be set at "ON".

7.05 Lever for raising the roller presser

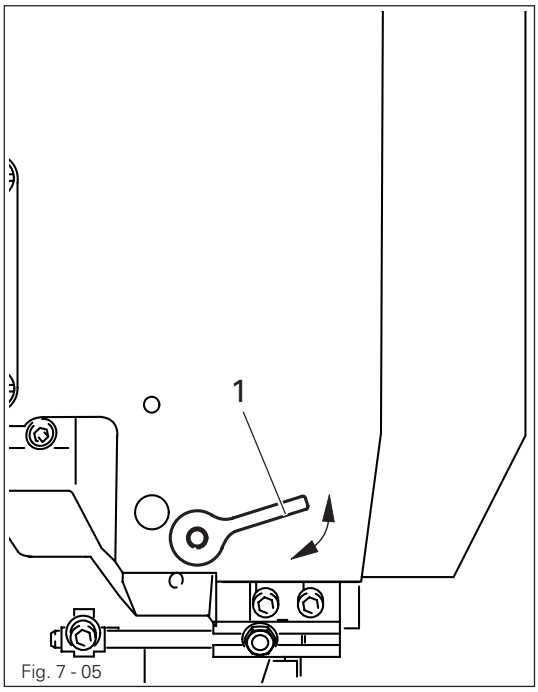

Fig. 7 - 05

- Raise the roller presser by turning lever **1**.

7.06 Control panel

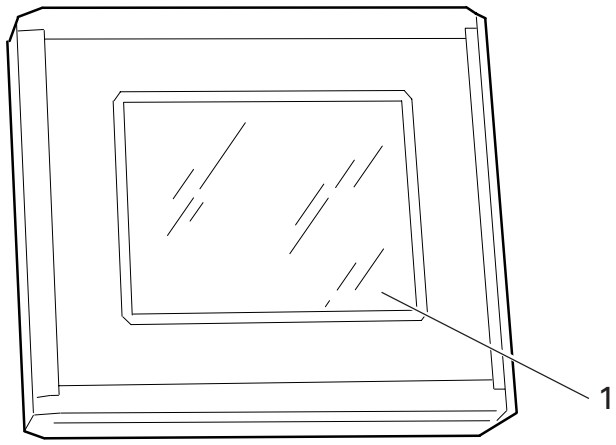

Fig. 7 - 06

The current operating conditions are displayed on control panel 1. Operation takes place in a constant dialogue between the control unit and the operator. For this purpose, depending on the operating condition of the machine, different symbols and/or texts are displayed. If the symbols or texts are framed, these show functions which can be selected by pressing the appropriate position on the monitor. By pressing the corresponding function this is carried out or switched on or off immediately, or a further menu appears, e.g. for entering a value. Activated functions are shown with inverted symbols. Unframed symbols or texts are only used for display purposes and cannot be selected by pressing.

Description of the functions

Normal symbol = function switched off (inactive)

Inverted symbol = function switched on (active)

8 Mounting and commissioning the machine

The machine must only be mounted and commissioned by qualified personnel! All relevant safety regulations are to be observed!

If the machine is delivered without a table, it must be ensured that the frame and the table top which you intend to use can hold the weight of the machine and the motor. It must be ensured that the supporting structure is sufficiently sturdy, including during all sewing operations.

8.01 Mounting

The necessary electricity supply must be available at the machine's location.
There must be a stable and horizontal surface and adequate lighting at the machine's location.

The method of packaging used requires that the table top be lowered for transport. The following is a description of how to adjust the height of the table top.

8.01.01 Adjusting the table-top height

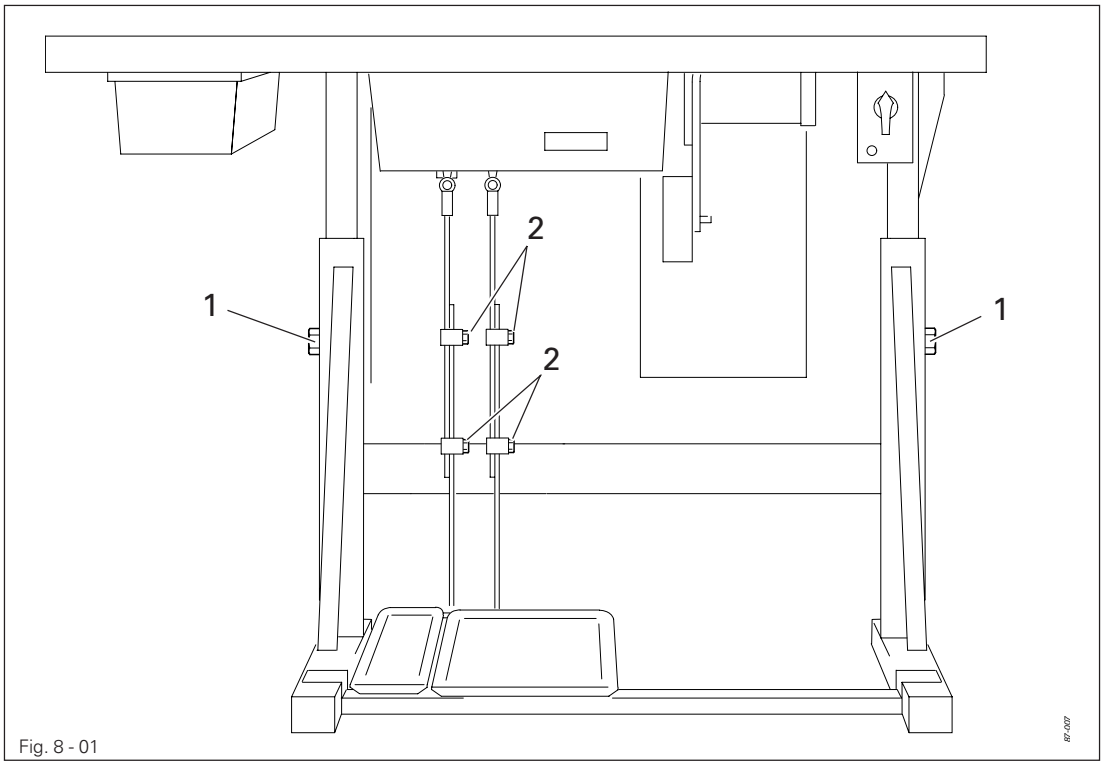

Fig. 8 - 01

- Loosen screws 1 and 2 and set the desired table-top height
- Tighten screws 1 well.
- Adjust the position of the pedal so that you can operate it comfortably and tighten screw 2.

8.01.02 Fitting the tilt lock

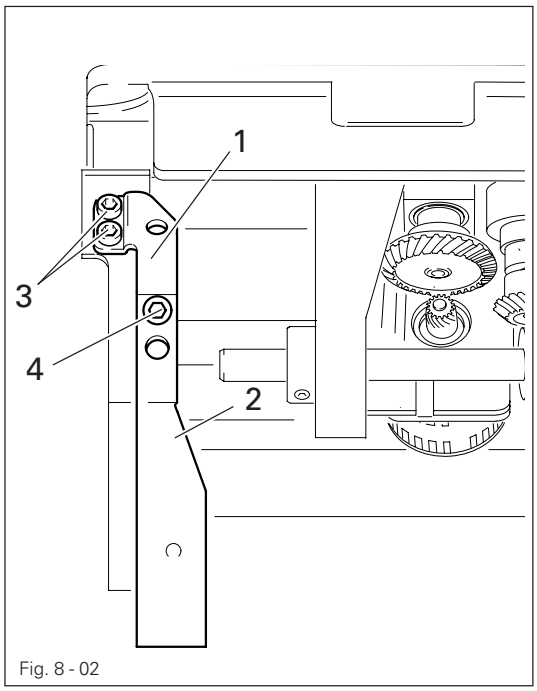

Fig. 8 - 02

Switch off the machine! Danger of injury if the machine is the machine is started accidentally!

- Attach the tilt lock **1** and **2** from the accessories with screws **3** and **4**.

Do not operate the machine without tilt lock **1**. Danger of crushing between sewing head and table top!

8.01.03 Fitting the machine cover

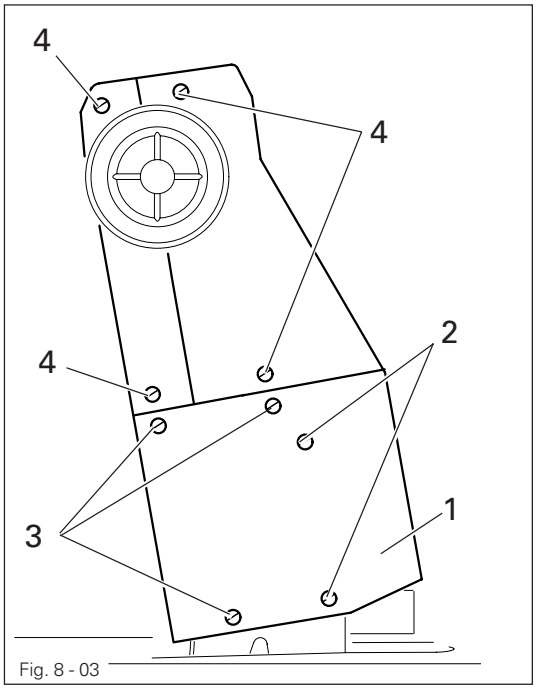

Fig. 8 - 03

- Slide the slots of the lower section of the cover **1** behind the heads of screws **2** and attach with screws **3**, then tighten screws **2** through the holes.
- Attach right and left cover sections with screws **4.**

8.02 Mounting the flange motor

8.02.01 Mounting the flange motor to the bearing plate

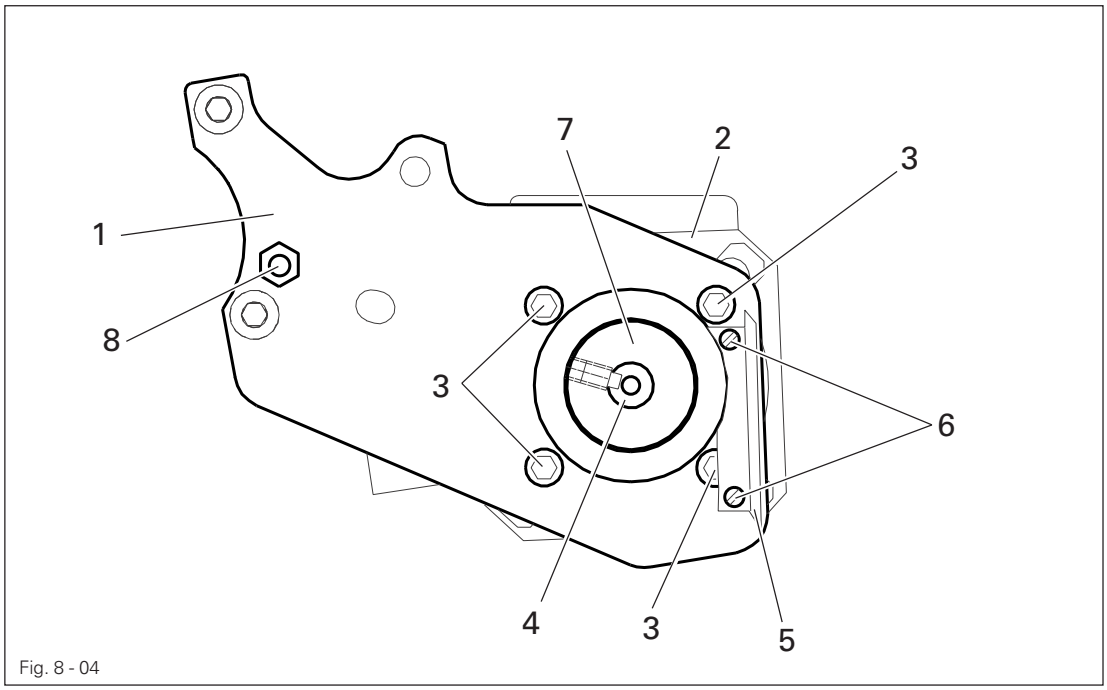

Fig. 8 - 04

- Attach bearing plate **1** to motor **2** with screws **3** as shown in **Fig. 8 - 04**.
- Remove the wedge from motor shaft **4**.
- Attach angle bracket **5** with screws **6**.
- Fit toothed belt wheel **7** to the motor shaft **4**, so that the point of the screw is located in the groove of the motor shaft.
- Screw threaded stud **8** into the bearing plate **1.**

8.02.02 Mounting the flange motor to the machine

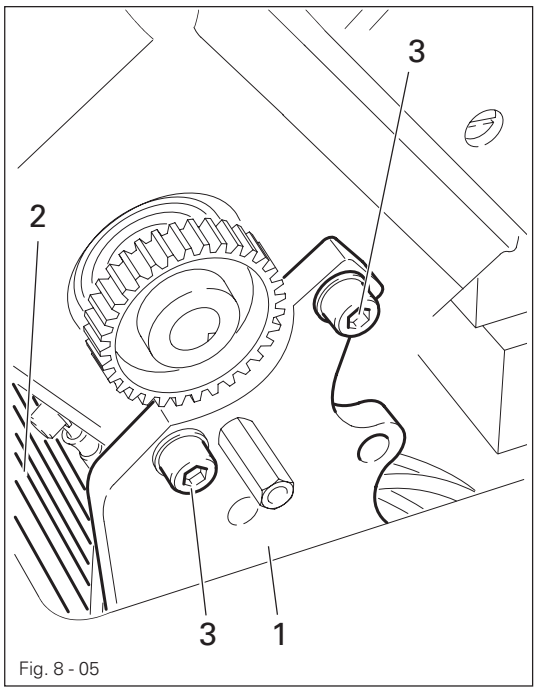

Fig. 8 - 05

- Attach bearing plate **1** of motor **2** to the machine case with screws **3** (only tighten screws **3** slightly).

8.02.03 Connecting the plug-in connections and earth cables

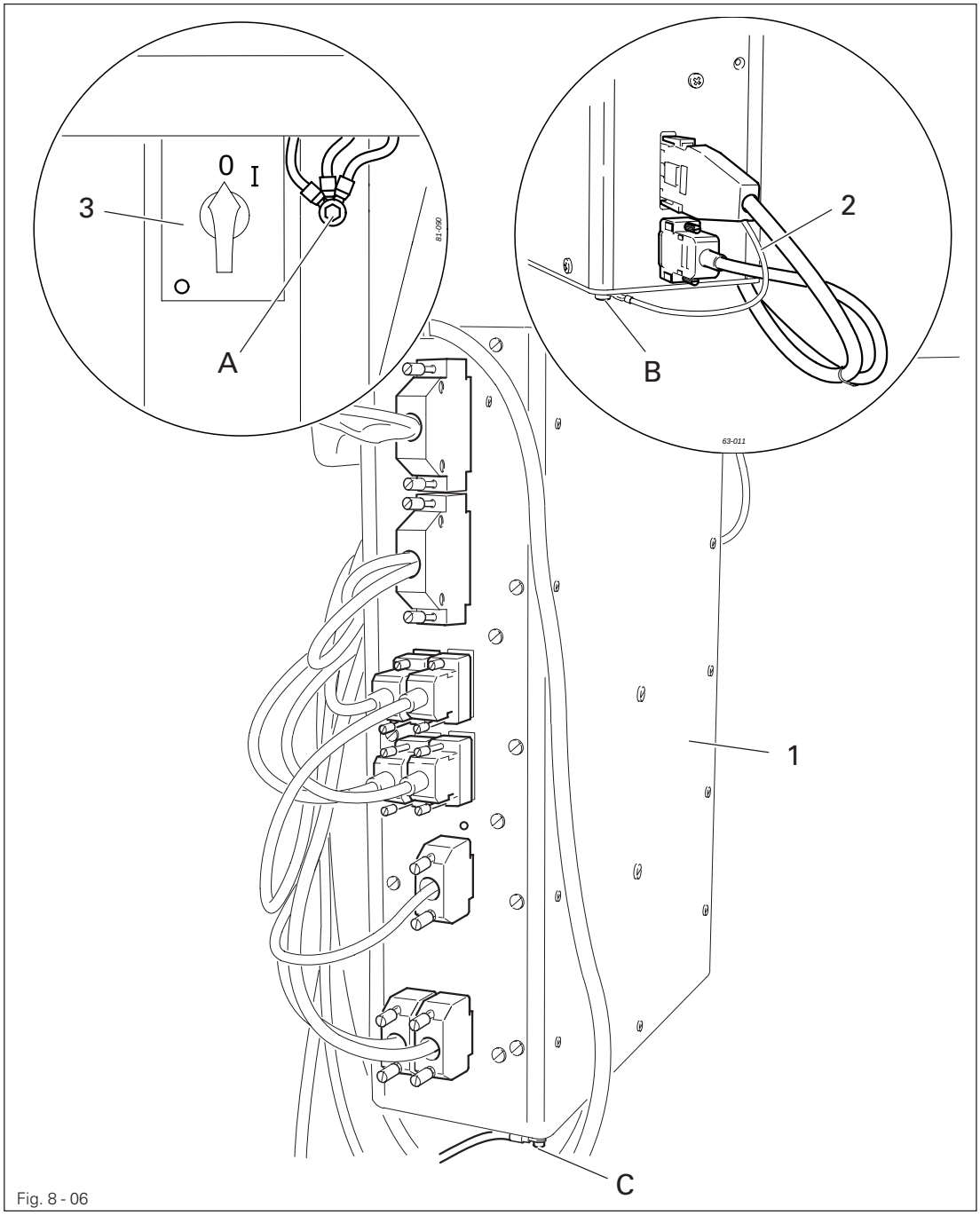

Fig. 8 - 06

- Connect all plugs as labelled to the control box **1**.
- Screw the earth cable from the sewing head to earth point **A**.
- Screw the earth cable **2** from the motor to earth point **B**.
- Connect earth point **C** and earth point **A** with an earth cable.
- Fasten the earth cable of the main switch to earth point **A**.

8.02.04 Mounting the toothed belt / Basic position of the machine drive unit

- Switch on the machine.

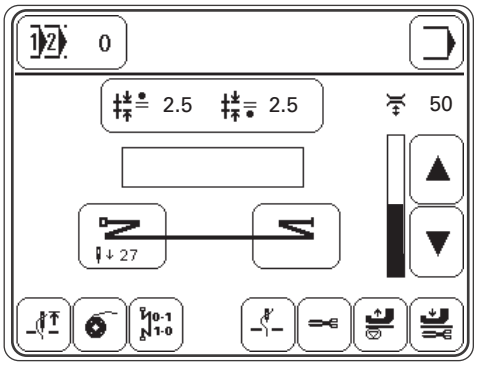

- Call up the input mode.

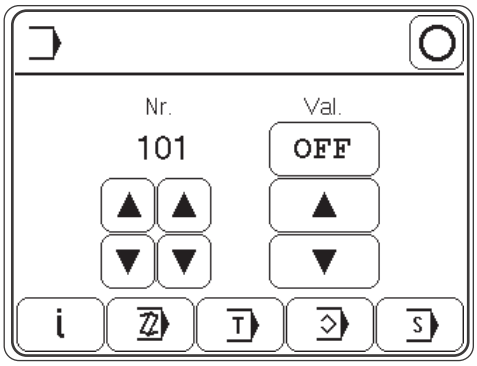

- Select the service menu.

- Enter the code number, see **Chapter 9.12 Entering/altering the code number.**

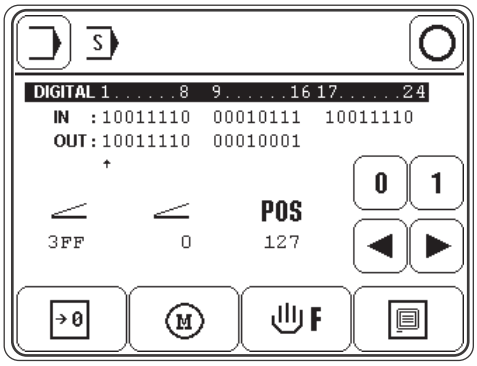

POS
11

- Turn the motor shaft by hand, until the value "**11**" is under "POS" on the display.

- Turn the balance wheel in sewing direction until the needle point descending from above, is level with the top edge of the needle plate.

- Fit toothed belt **5**, making sure that both motor shaft **4** (Fig. 8 - 07) and the machine are not moved.

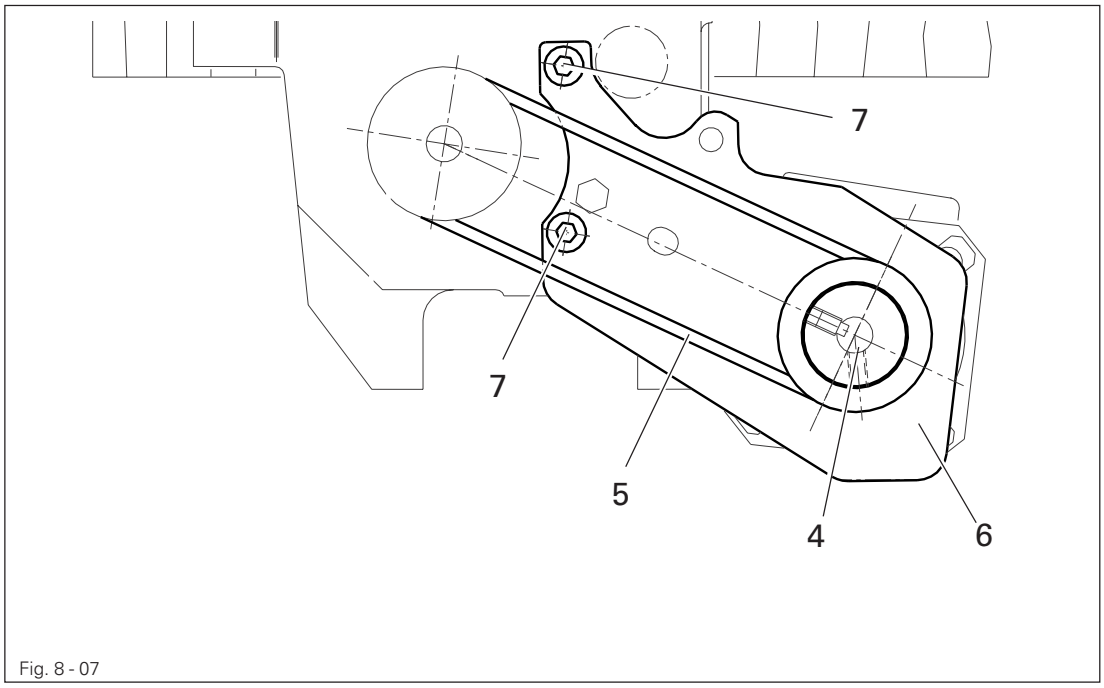

Fig. 8 - 07

- Move bearing plate **6** of the motor, so that toothed belt **5** is stretched.
- In this position tighten screws **7**.
- Turn the balance wheel in sewing direction until the needle point descending from above, is level with the top edge of the needle plate and re-check the value. A tolerance of **± 2 increments** is allowed.

- Conclude the input.

8.02.05 Mounting the belt guard of the flange motor

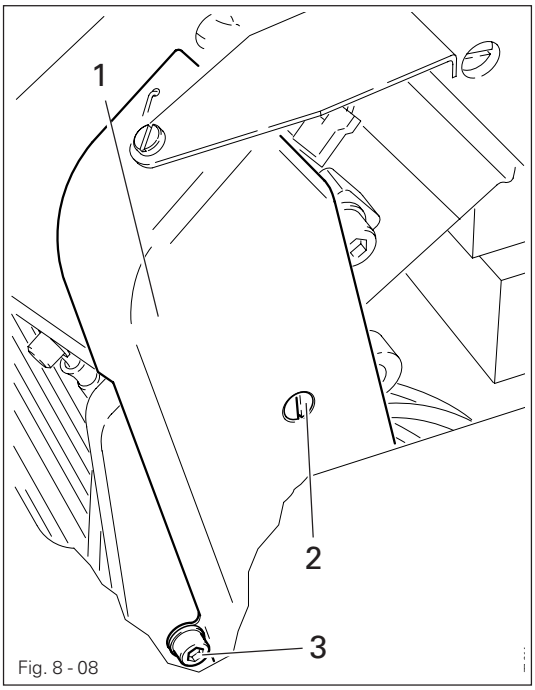

Fig. 8 - 08

- Attach belt guard **1** with screws **2** and **3**.

8.02.06 Connecting the safety switch

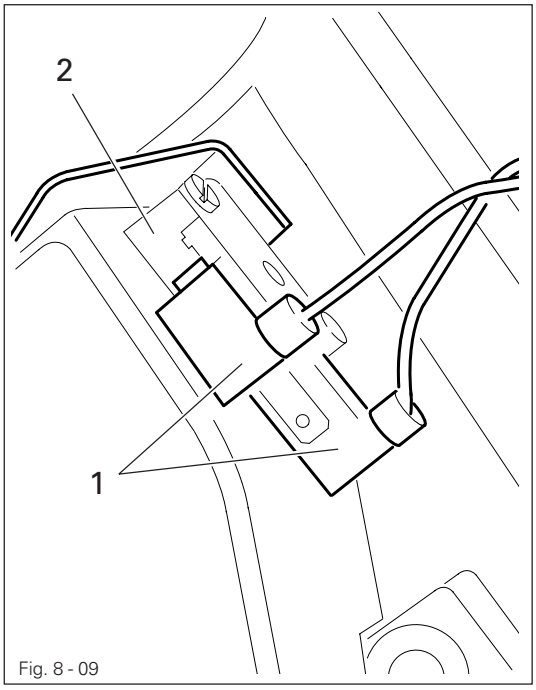

Fig. 8 - 09

- Connect plug **1** of safety switch **2** as shown in **Fig. 8-09**.

When the sewing head is tilted back, the safety switch prevents the machine starting when the main switch is on.

8.02.07 Checking the function of the start inhibitor

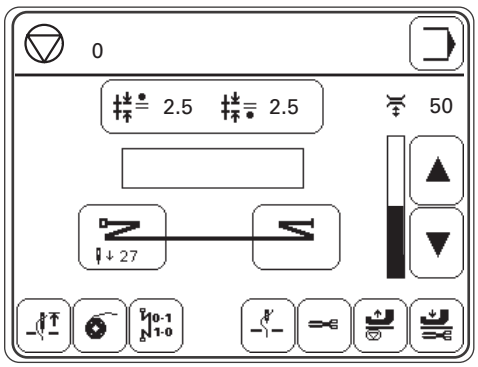

- Switch the machine on at the main switch and tilt back the sewing head.
  The "stop" symbol must appear on the control panel.
- If the message does not appear, check the setting of the safety switch.
- Set the sewing head upright.
  The machine is ready for operation again.

8.03 Mounting the spool holder

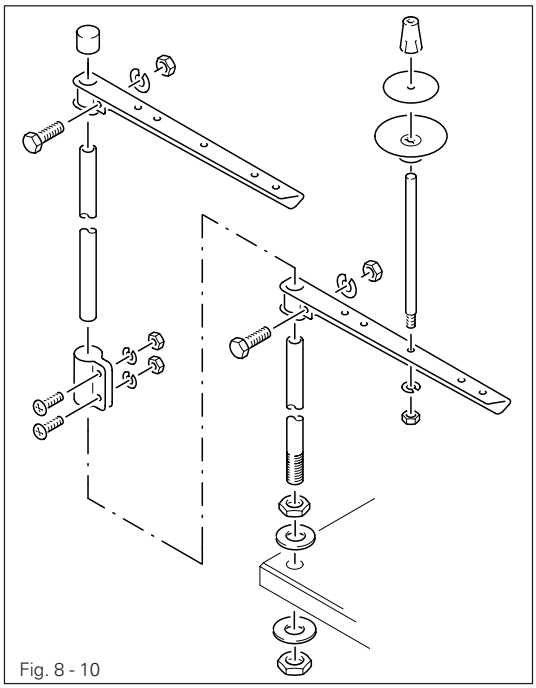

Fig. 8 - 10

- Mount the spool holder as shown in Fig. 8 - 10.
- Insert the spool holder into the hole in the table top and affix it with the nuts enclosed.

8.04 Commissioning

- Clean the machine thoroughly and then oil it, or fill in oil, see **Chapter 11 Care and Maintenance.**
- Examine the machine, in particular the electric cables, for any damage.
- Have a qualified person check whether the motor can be driven with the existing power voltage.

If there are any differences, the machine must definitely not be operated!

The machine must only be connected to a suitably earthed socket!

- When the machine is running, the balance wheel must turn towards the operator. If this is not the case, have the motor adjusted by specialist staff, see **Chapter 13.06 Parameter settings.**

8.05 Switching the machine on/off

- Switch on the machine, see **Chapter 7.01 Main switch.**

9 Preparation

All regulations and instructions in this Instruction Manual are to be observed! Special attention is to be paid to the safety regulations!

All preparation work is only to be carried out by appropriately trained personnel. Before all preparation work, the machine is to be separated from the electricity supply by removing the plug from the mains or switching off the On/Off switch!

9.01 Inserting the needle

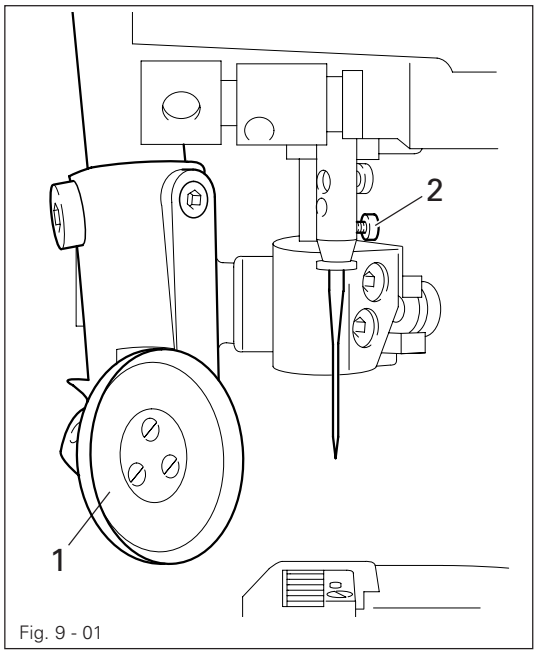

Fig. 9 - 01

Switch off the machine! Danger of injury if the machine is started accidentally!

Only use needles from the system intended for the machine, see **Chapter 3 Specifications.**

- Raise the roller presser **1**.
- Pull down roller presser **1** a little and swing it towards the left.
- Loosen screw **2** and insert the needle as far as possible. The long needle groove must be facing towards the left.
- Tighten screw **2** and swing the roller presser back into position.

The selection of the correct needle depends on the model of the machine, as well as the material and threads being sewn (**see chapter 3.02 Model, needle and thread**).

9.02 Winding the bobbin thread, adjusting the thread tension

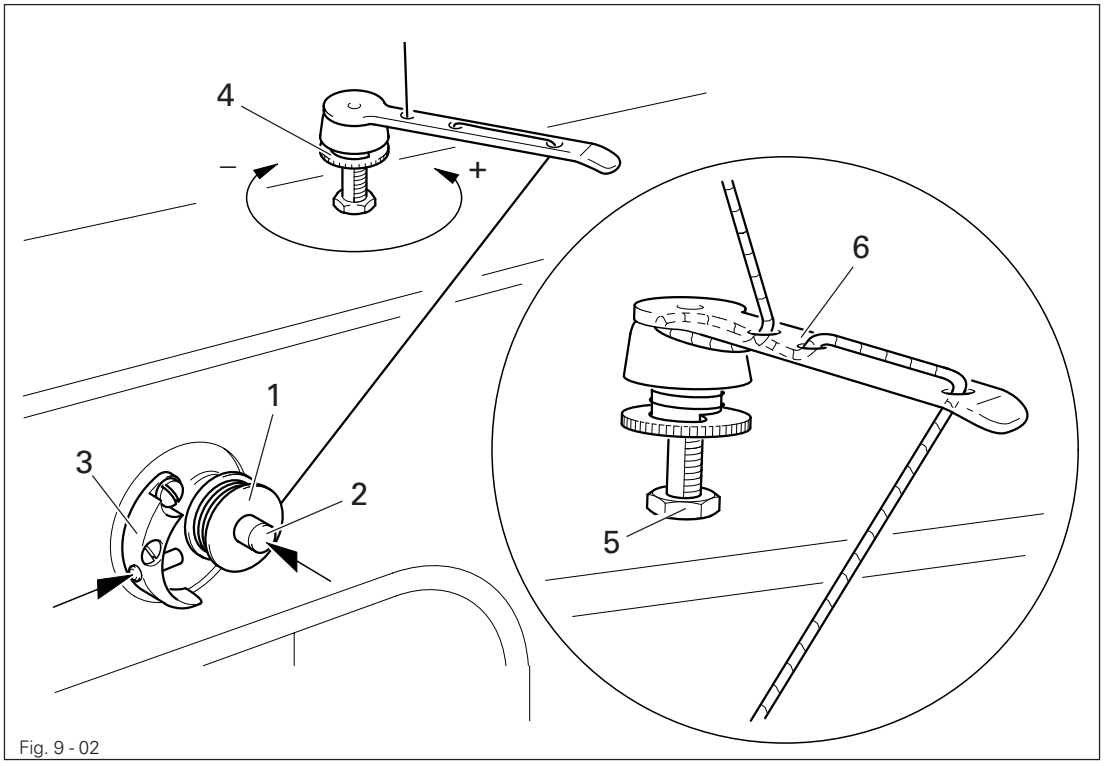

Fig. 9 - 02

- Place an empty bobbin 1 onto bobbin winder spindle 2.
- Thread the bobbin in accordance with Fig. 9 - 02 and wind it clockwise around bobbin 1 a few times.
- Switch on the bobbin winder by pressing the bobbin winder spindle 2 and lever 3 at the same time.

The bobbin fills up while you are sewing.

If the bobbin is filled outside the sewing operation, the drive for the roller presser, Puller and the feed wheel should be switched off by pressing the "**wind the bobbin thread**" function. This function is only available in the manual sewing mode.

- The tension of the thread on bobbin 1 can be adjusted with knurled screw 4.
- The bobbin winder stops automatically when bobbin 1 is full.

If the thread is wound unevenly:

- Loosen nut 5.
- Turn thread guide 6 accordingly.
- Tighten nut 5.

9.03 Removing/inserting the bobbin case

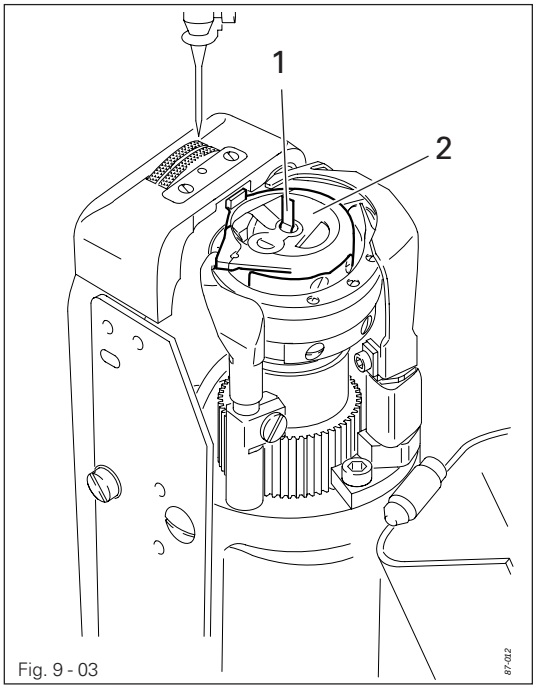

Fig. 9 - 03

Turn the machine off!
Danger of injury if the machine is started accidentally!

Removing the bobbin case:

- Open the post cap.
- Raise latch 1 and remove bobbin case 2.

Inserting the bobbin case:

- Insert bobbin case 2.
- Close the latch and close the post cap.

9.04 Threading the bobbin case / Adjusting the bobbin thread tension

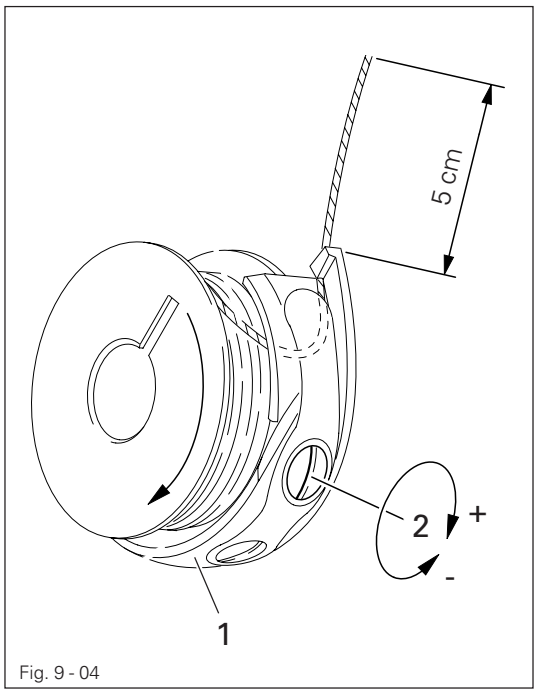

Fig. 9 - 04

- Insert the bobbin into the bobbin case 1.
- Pass the thread through the slot under the spring.
- Pass the thread through the notch.
- Adjust the thread tension by turning screw 2.

When the thread is pulled, the bobbin must rotate in the direction of the arrow.

9.05 Threading the needle thread

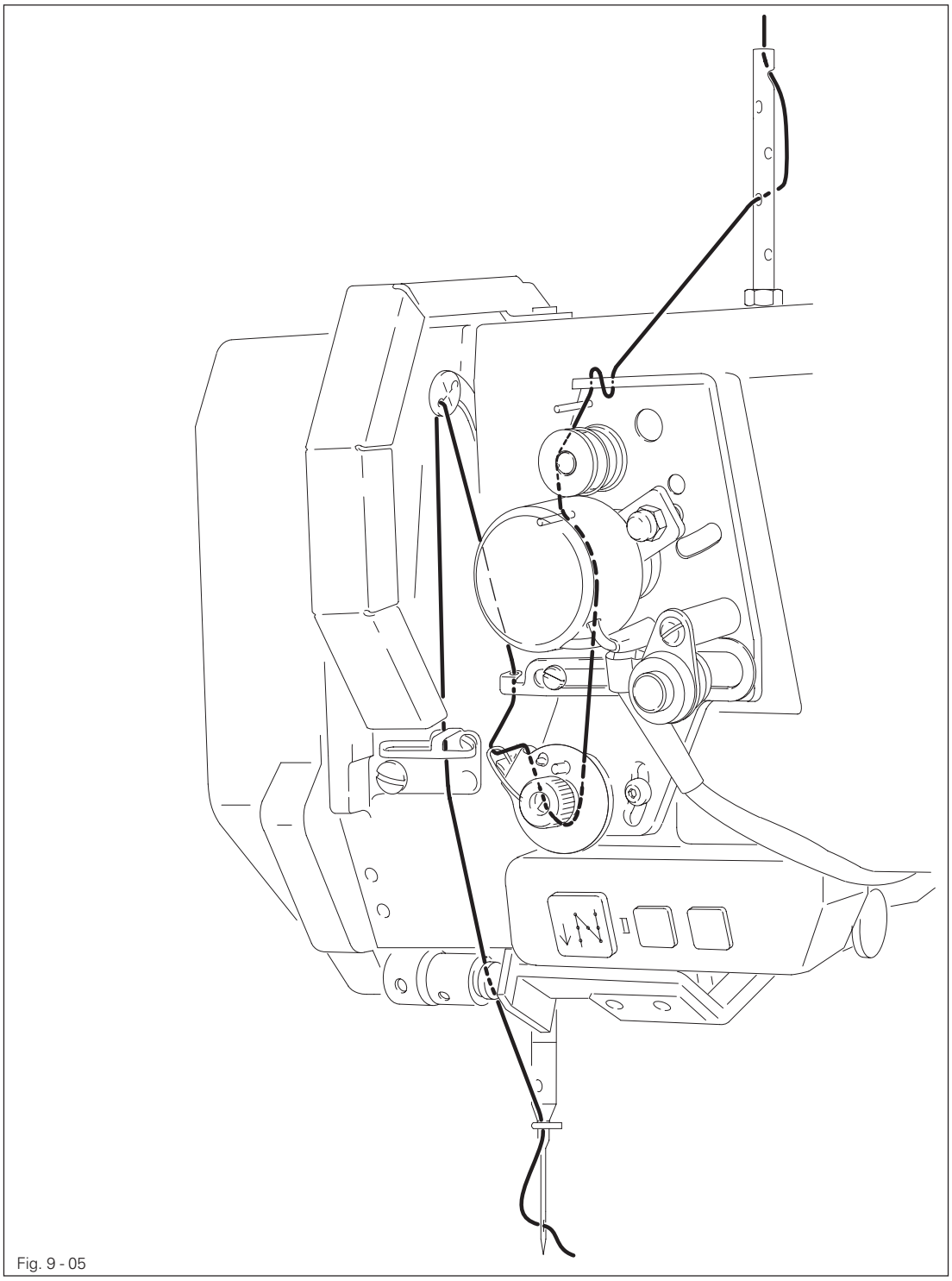

Fig. 9 - 05

Switch off the machine!
Danger of injury if the machine is started accidentally!

- Thread the machine as shown in **Fig. 9-05**.

9.06 Setting the needle thread function

- Switch on the machine.

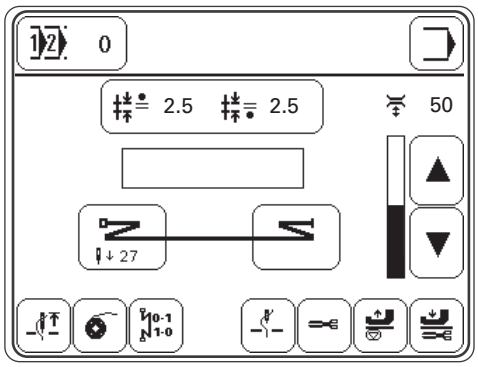

- Increase or reduce the thread tension.
  The value for the thread tension can be read on the display from the numerical value, e.g. 50, and on the bar graph display.

In the manual sewing mode and in the fixed programs 1 and 2, the thread tension can be changed directly.
In the programmed sewing mode, the thread tension is made up of the offset entered and the directly altered thread tension. The actual thread tension is always shown on the display.

9.07 Selecting the program number

- Switch on the machine.

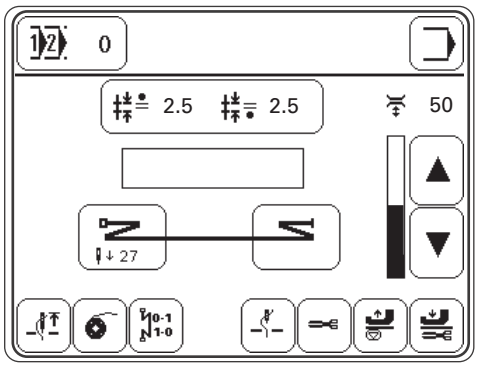

- Call up the program number input menu.

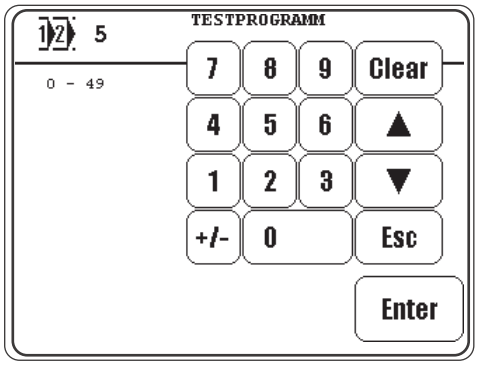

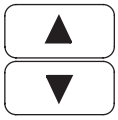

- Select the desired program number.

- Confirm the selection and quit the selection menu.

The type of sewing is stipulated with the selection of the program number, see **Chapter 10 Sewing.**

Program number **0**:	Manual sewing
Program number **1** and **2**:	Sewing with fixed programs
Program number **3** to **49**:	Programmed sewing

9.08 Setting the stitch lengths

In the manual sewing mode and in the fixed programs 1 and 2, the feed strokes of the roller presser and feed wheel can be changed directly.

- Switch on the machine.

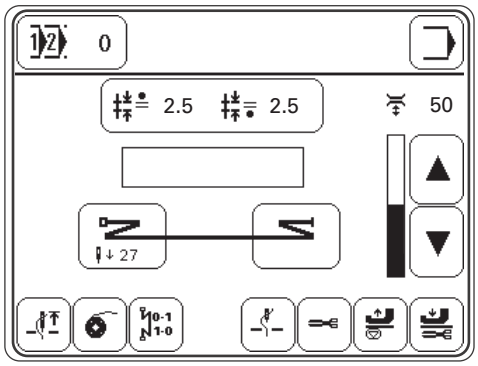

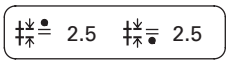

- Call up the stitch length input menu.

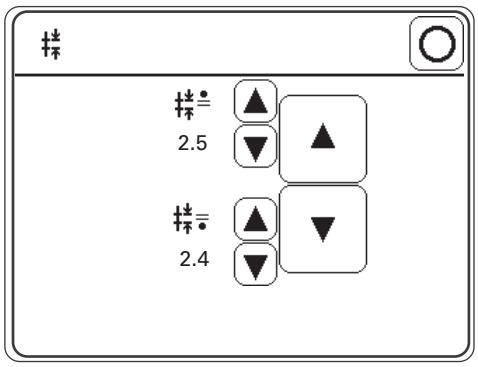

- Change the feed strokes for roller presser and feed wheel individually

or

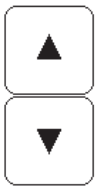

- Change the feed strokes for roller presser and feed wheel at the same time.

- Conclude the input.

9.09 Entering the fullness area for the pedal adjustment

With parameter "107" it is possible to stipulate the maximum feed stroke of the roller presser, which can be called up in infinite variations with the fullness pedal (left pedal).

- Switch on the machine.

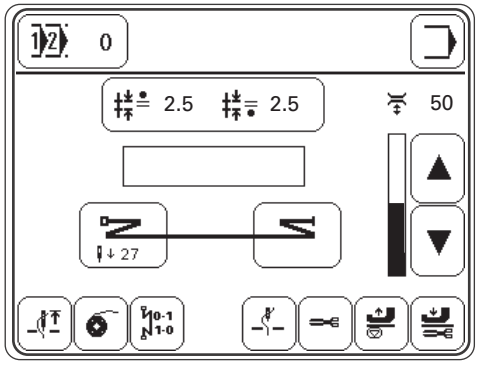

- Call up the input mode.

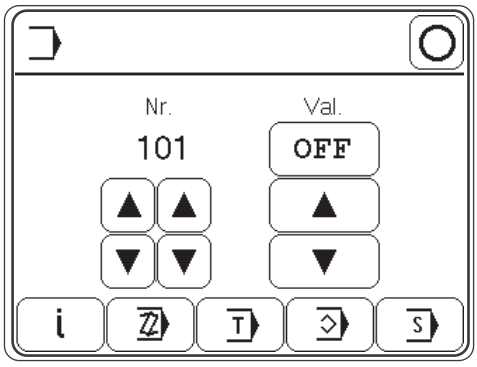

- Select parameter "107".

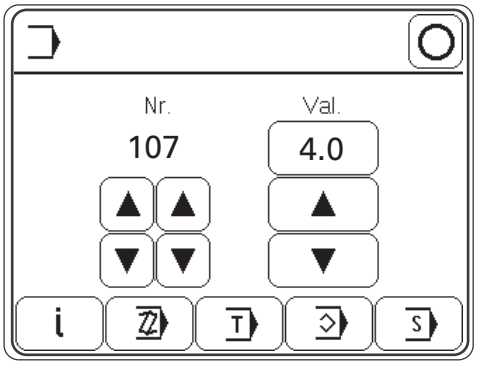

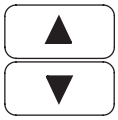

- Set the maximum feed stroke of the roller presser with the fullness pedal (left pedal).

- Conclude the input.
  When the fullness pedal is activated, a bar display appears on the screen which shows the actual amount of fullness in the fullness area entered, dependent on the pedal setting.

9.10 Entering the start and end backtacks

In the manual sewing mode and in the fixed programs 1 and 2 the selection of start and end backtacks and the input of the corresponding values can be carried out directly.
In addition to the backtacks it is also possible to define a placement stitch for the beginning of the seam.

- Switch on the machine.

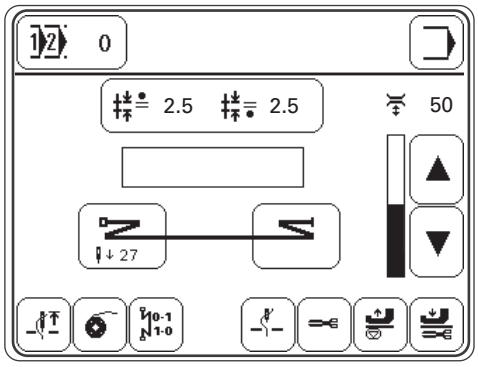

- Call up the start backtack input menu.

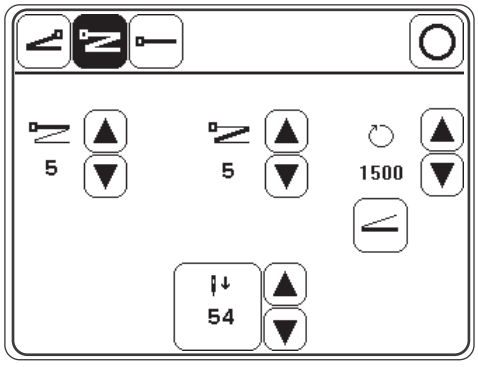

- Select the desired type of start backtack. The selected (activated) function appears as an inverse symbol:

Single start backtack

Double start backtack

Without start backtack

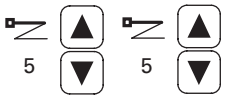

- Enter the number of stitches for the forward and reverse stitches.

- Enter the backtack speed.

- If applicable, switch on the pedal-controlled speed.
  When the function is activated (inverse symbol), the backtack speed can be adjusted up to its maximum value by pedal.

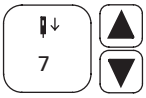

- If applicable, activate the stitch placement function and enter the value for the stitch position.

- Conclude the start backtack input.

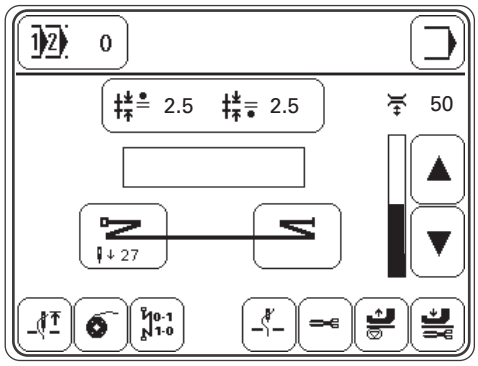

- Call up the backtack input menu.
  The input for the end backtack value is analogous to that for the start backtack. The pedal-controlled backtack speed and the stitch placement position cannot be selected at the end of the seam.

9.11 Switching on / adjusting the bobbin thread control with the stitch count function

- Switch on the machine.

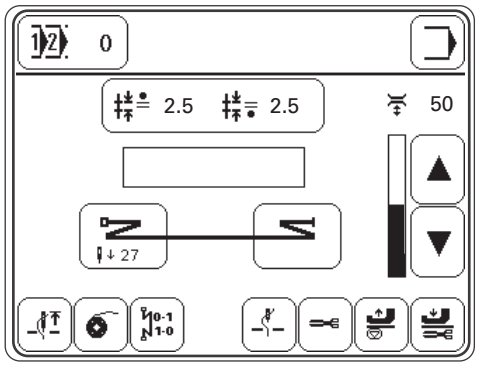

- Call up the input mode.

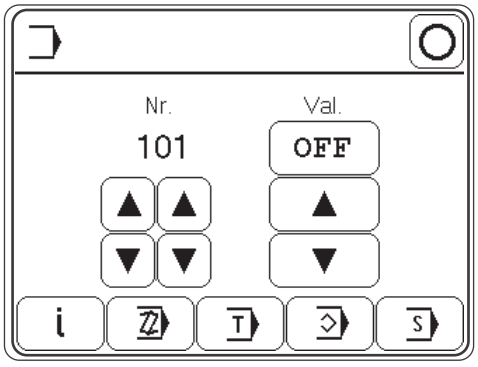

- Select parameter "104".

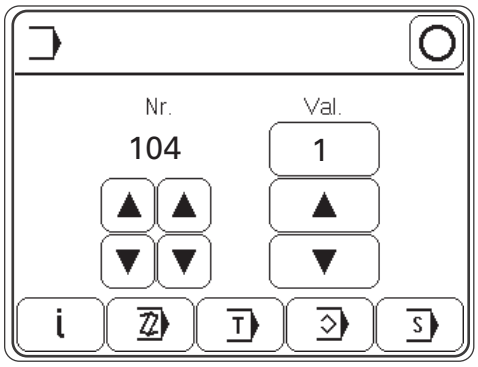

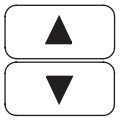

- Switch on the bobbin thread control with the reverse stitch count function (value "1").

- Select parameter "105".

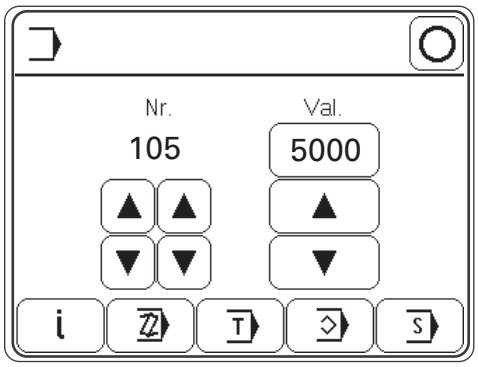

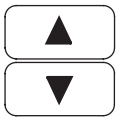

- Enter the number of stitches, which are to be sewn with one bobbin.

- Conclude the input.
  When the number of stitches entered have been sewn, the diode on the sewing head panel flashes. After thread trimming the message "WARNING 2" appears on the display, also see **Chapter 13.08 Warning messages.**

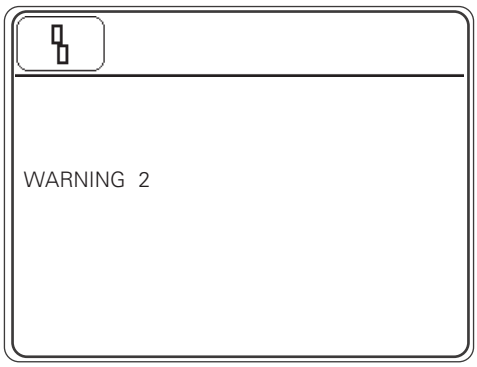

- After changing the bobbin, acknowledge the elimination of the error.

9.12 Entering / altering the code number

- Switch on the machine.

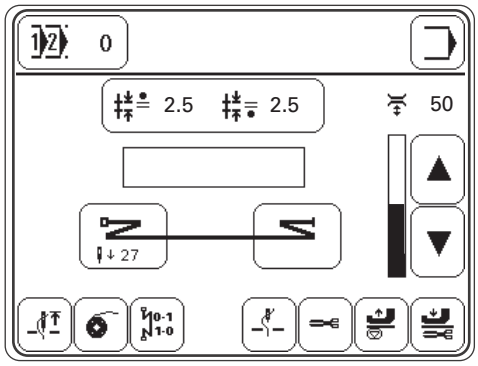

- Call up the input mode.

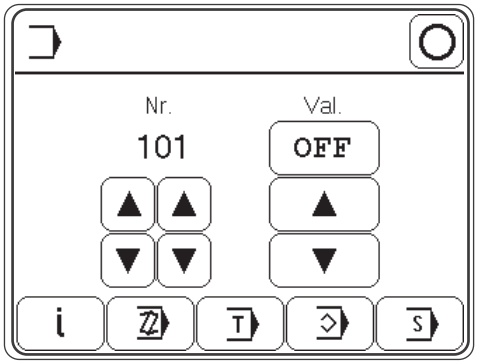

- Select parameter "800".

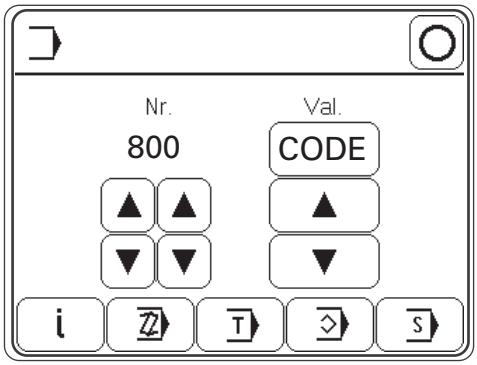

CODE

- Select the code number input menu.
- Enter the code number on the number keys (factory code setting is "1500").

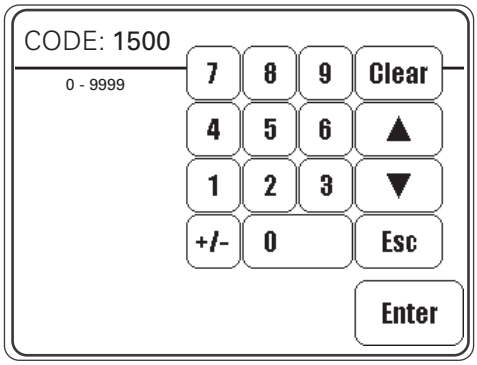

Enter ● Take over the code number entered.

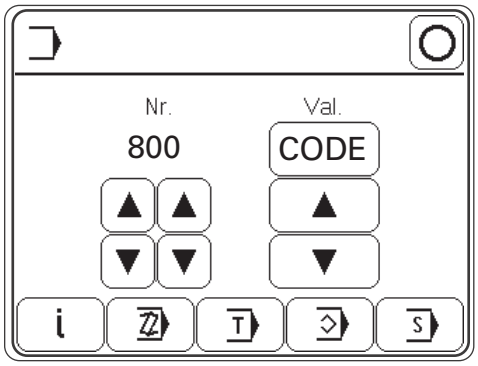

The code input remains stored until the machine is switched off at the main switch. As long as the machine is not switched off, all parameters are freely accessible without having to enter the code number again.

● Select parameter "810"

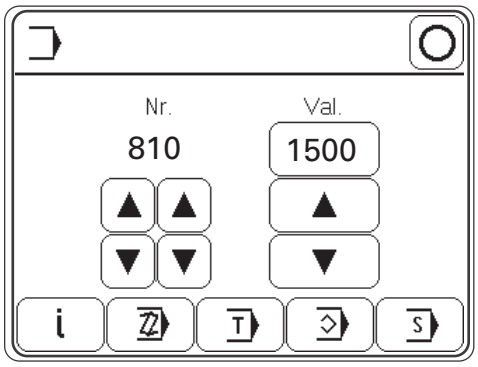

1500 ● Call up the code number input menu and enter the desired code number.

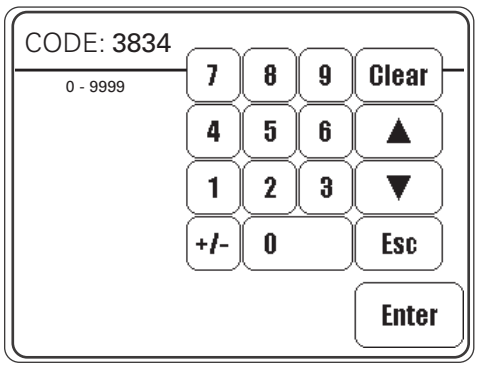

Enter ● Take over the new code number.

● Conclude input.

9.13 Adjusting the control panel

- Switch on the machine.

- Call up the input mode.

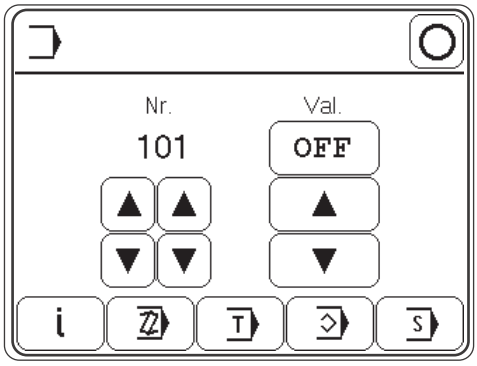

- Select the service menu.

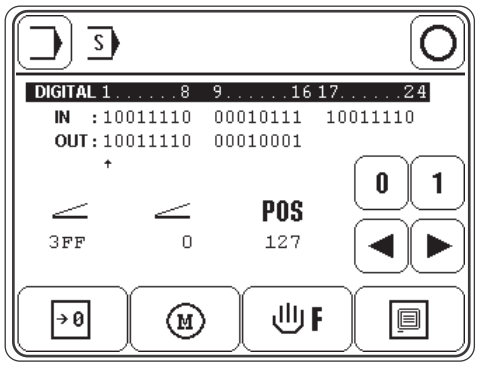

- Select control panel functions.

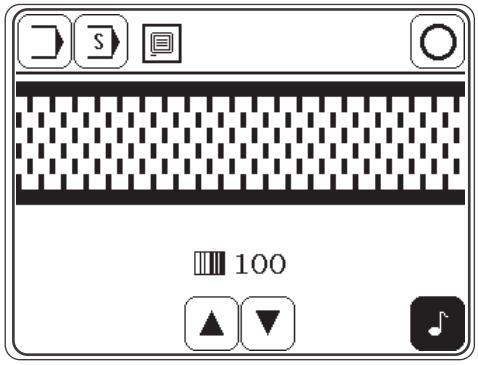

- Change the display contrast.

- Switch the key tone off or on.

Never reduce the display contrast to the extent, that the display can no longer be read!

10 Sewing

In the sewing mode all relevant settings for the sewing operation are displayed on the screen and can be altered with the corresponding functions.
In the sewing mode a difference is made between manual sewing, sewing with fixed programs and programmed sewing.
The selection is made with the corresponding program number:

0:	Manual sewing
1 and 2:	Sewing with fixed programs
3 to 49:	Programmed sewing (with up to 15 seam sections for both the left and right seam)

10.01 Manual sewing

In the manual sewing mode the values for the feed strokes (stitch lengths) of the bottom feed (feed wheel) and the top feed (roller presser), the start and end backtacks, the stitch placement position when starting sewing, the thread tension and the needle and sewing foot positions are shown on the display and can be changed directly. Fullness can be controlled with the stitch length input on the control panel or with the aid of the left pedal. If the fullness is selected with the left pedal, the current fullness value is displayed as a bar display below the stitch length display.

- Switch on the machine and select program number "0", see **Chapter 9.07 Selecting the program number.**

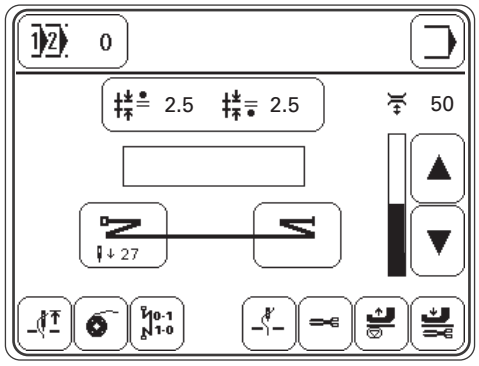

Explanation of the functions

Program selection
This opens the menu for entering the program number, see **Chapter 9.07 Selecting the program number.**

Input mode
Exit the sewing mode and select the input mode.

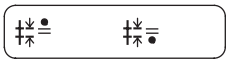

Stitch lengths
This opens the menu for entering the feed strokes of roller presser and feed wheel, see **Chapter 9.08 Adjusting the stitch lengths.**

Start backtack
This opens the menu for entering the seam start, see **Chapter 9.10 Entering the start and end backtacks.**

End backtack
This opens the menu for entering the seam end, see **Chapter 9.10 Entering the start and end backtacks.**

Thread tension
This changes the needle thread tension, see **Chapter 9.06 Adjusting the needle thread tension.**

Needle raised
Moves the needle to its highest position (t.d.c take-up lever.)

Winding the bobbin thread
Enables winding without the feed motion of roller presser and feed wheel.

Bartack suppression
When pressed once, this suppresses the next bartack.
When pressed twice, this suppresses the next two bartacks.

Needle position raised
When this function is activated, the needle moves to its highest position (t.d.c take-up lever.) after sewing stops.

Thread trimming
When activated, this function enables thread trimming with the pedal function.

Roller presser raised
When activated, this function raises the roller presser after sewing stops.

Roller presser lowered after thread trimming
When this function is activated, the roller presser is not raised after thread trimming.

- Sewing is carried out with the pedal functions, see **Chapter 7.03 Pedal.**

10.02 Sewing with fixed programs

Fixed programs are stored under the program numbers **1** and **2**.
The fixed programs are used for the quick and easy production of seams with different stitch lengths or amounts of fullness. When sewing with fixed programs, 2 or 3 seam sections are sewn after each other. With the knee switch it is possible to move to the next section. The fixed programs are designed as cyclic running programs, i.e. at the end of the last seam section, the machines moves back to the first seam section. The values for the bottom feed (feed wheel) and top feed strokes (roller presser) can be changed for each individual seam section. The values for the start and end backtacks, the stitch placement position when sewing starts, the needle and sewing foot positions and the thread tension apply to all sections and can be changed at any time.

- Switch on the machine and select program number "1" or "2", see **Chapter 9.07 Selecting the program number.**

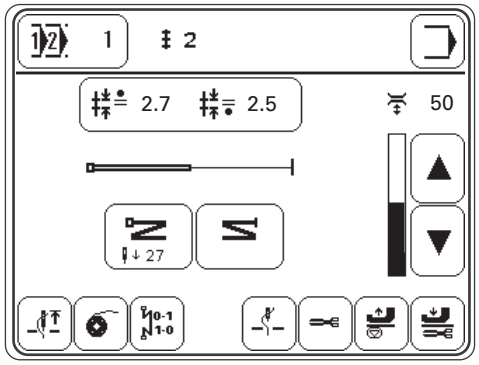

Explanation of the displays and functions

Program selection
This opens the menu for entering the program number, see **Chapter 9.07 Selecting the program number.**

2

Seam section
Shows the number of seam sections in the sewing program.

Input mode
Exit the sewing mode and select the input mode.

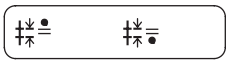

Stitch lengths
This opens the menu for entering the feed strokes of roller presser and feed wheel, see **Chapter 9.08 Adjusting the stitch lengths.**

Start backtack
This opens the menu for entering the seam start, see **Chapter 9.10 Entering the start and end backtacks.**

End backtack
This opens the menu for entering the seam end, see **Chapter 9.10 Entering the start and end backtacks.**

50

Thread tension

This changes the needle thread tension, see **Chapter 9.06 Adjusting the needle thread tension.**

Needle raised

Moves the needle to its highest position (t.d.c take-up lever.)

Winding the bobbin thread

Enables winding without the feed motion of roller presser and feed wheel, see **Chapter 9.02 Winding the bobbin thread / Adjusting the bobbin winder tension.**

Bartack suppression

When pressed once, this suppresses the next bartack.
When pressed twice, this suppresses the next two bartacks

Needle position raised

When this function is activated, the needle moves to its highest position (t.d.c take-up lever.) after sewing stops.

Thread trimming

When activated, this function enables thread trimming with the pedal function.

Roller presser raised

When activated, this function raises the roller presser after sewing stops.

Roller presser lowered after thread trimming

When this function is activated, the roller presser is not raised after thread trimming.

- Sewing is carried out with the pedal and knee switch functions, see **Chapter 7.03 Pedal** or **7.04 Knee switch.**

10.03 Programmed sewing

With the program numbers **3 – 49** it is possible to call up **previously** programmed seams. In programmed sewing all seam sections for setting a sleeve are set in one seam program. The information about the seam program, such as program number, number of programmed seam sections, programmed comments and garment size is displayed.
For better orientation a seam sketch is shown as an armhole with the programmed seam sections. The seam start, seam end, the seam sections already sewn, the current seam section and the seam sections still to be sewn are illustrated by symbols and different types of lines with different thicknesses. The parameters corresponding to the current seam section, seam section number, top feed stroke (roller presser) with fullness adjustment, bottom feed stroke (feed wheel), length of the seam section and thread tension, are displayed. The top feed stroke (roller presser), fullness adjustment and thread tension can be altered directly.

- Switch on the machine and select the desired program number from "3" to "49", see **Chapter 9.07 Selecting the program number.**

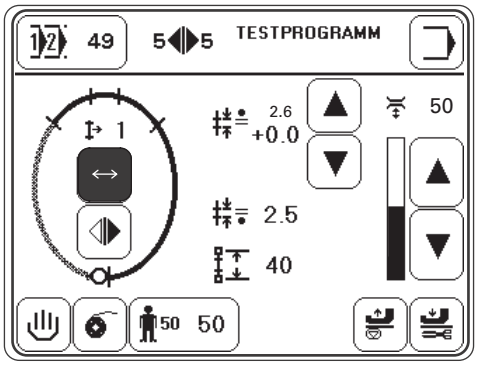

Explanation of the displays and functions

Program selection
This opens the menu for entering the program number, see **Chapter 9.07 Selecting the program number.**

Seam section right/left
Shows the number of seam sections in the seam program for the right/left sleeve seam.

Input mode
Exit the sewing mode and select the input mode.

Current seam section
Shows the current seam section.

Automatic seam change
When this function is activated, the machine changes automatically from the right to left sleeve seam.

Current seam
This function is used to select and display the current sleeve seam (right/left).

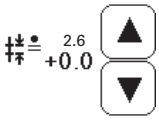

Stitch length roller presser / fullness adjustment
This function is used to display and alter the current values for the feed stroke of the roller presser and the fullness adjustment, see **Chapter 10.03.01 Fullness adjustment.**

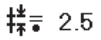

Stitch length feed wheel
Shows the current value for the feed stroke of the feed wheel.

Length of the seam section
Shows the current value for the length of the seam section.

Thread tension
This changes the needle thread tension, see **Chapter 9.06 Adjusting the needle thread tension.**

Program interruption
Interrupts the seam sequence, see **Chapter 10.03.03 Program interruption.**

Winding the bobbin thread
Enables winding without the feed motion of roller presser and feed wheel, see **Chapter 9.02 Winding the bobbin thread / Adjusting the bobbin winder tension.**

Basic size / garment size
Shows the basic size and opens a menu for selecting the garment size, see **Chapter 10.03.02 Selecting the garment size.**

Roller presser raised
When activated, this function raises the roller presser after sewing stops.

Roller presser lowered after thread trimming
When this function is activated, the roller presser is not raised after thread trimming.

- Sewing is carried out with the pedal and knee switch functions, see **Chapter 7.03 Pedal.**

If the knee switch is used to switch between the seam sections, parameter "201" must be set at "ON". With this parameter setting it is only possible to change seam sections with the knee switch.

10.03.01 Fullness adjustment

In programmed sewing the programmed fullness can be corrected directly without changing the seam program. It is only possible to enter a fullness adjustment if an amount of fullness is programmed in at least one seam section. The fullness adjustment can have an effect on the complete seam program or merely on the current seam section.

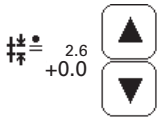

- If the fullness adjustment in the first seam section is entered before sewing begins, then the fullness adjustment applies to the complete seam program (only seam sections with programmed fullness) and is maintained.
  (Stitch length small, adjustment value large)

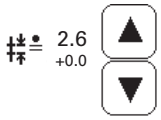

- If the fullness is adjusted after sewing starts,, the adjustment only has effect on the **current seam section.**
  (Stitch length large, adjustment value small)

10.03.02 Selecting the garment size

Based on the programmed basic size, in programmed sewing it is possible to select a garment size. The seam sections, which were given a graduated value during programming, are converted to the new size.

- Call up the menu for selecting the garment size.

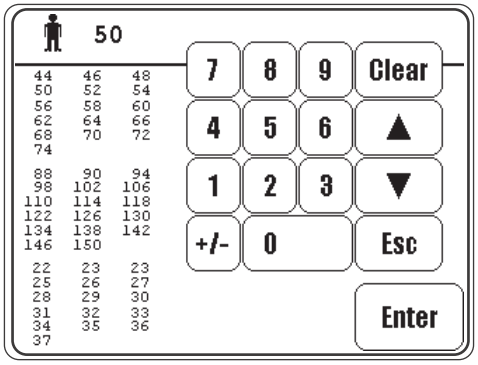

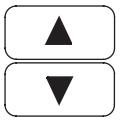

- Select the desired garment size.

- Confirm selection and exit selection menu.

10.03.03 Program interruption

With the "program interruption" function the programmed seam sequence is interrupted (e.g. if the thread breaks).

- Interrupt program sequence.

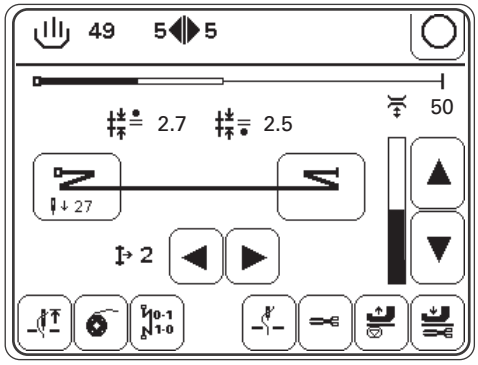

- If necessary, tact forwards or backwards through the sections of the seam program.
- If necessary, alter the seam backtacks and thread tension and carry out the other functions as in manual sewing, see **Chapter 10.01 Manual sewing.**

- If necessary, call up programmed sewing again.

10.04 Error messages

If an error occurs, the text "ERROR" appears on the display, together with an error code. An error message is caused by incorrect settings, defective elements or seam programs and by overload conditions.
For an explanation of the error codes see **Chapter 13.07 Explanation of the error messages.**

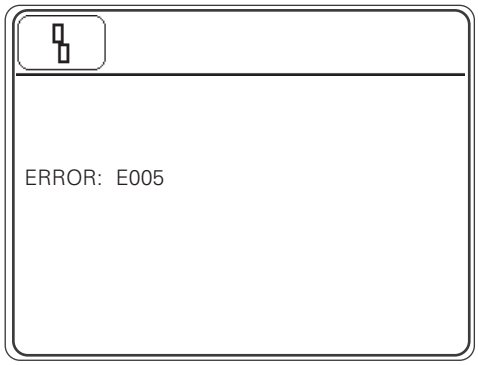

- Eliminate the error.

- Confirm error elimination.

11 Input

In the input mode the functions parameter input, information, creating/adjusting a sewing program, teach-in, program administration and service are available.

- Switch on the machine.

- Call up the input mode.

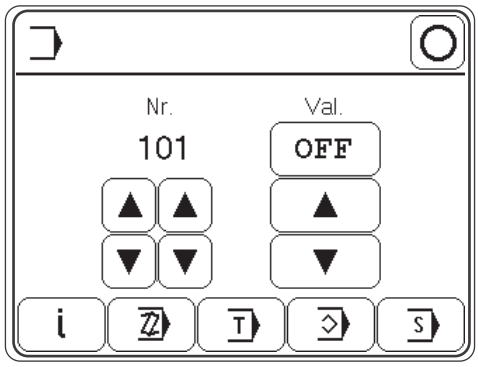

Explanation of the functions

Sewing mode
Quit the input mode and call up the sewing mode.

Parameter selection
Select the hundred and unit figures of the desired parameters, see **Chapter 13.06.02 Example of a parameter input.**

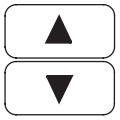

Altering the parameter value
Change the value of the selected parameter, see **Chapter 13.06.02 Example of a parameter input.**

Software information
Calls up information about the current machine software.

Creating/adjusting a program
Opens the menu for entering or altering a seam program, see **Chapter 11.01.02 Seam program input with the "Creating/adjusting a program" function.**

Teach In
Opens the menu for entering seam programs after sewing a sample, see **Chapter 11.01.03 Seam program input with the "Teach in" function.**

Program administration
Opens the menu for seam program administration, see **Chapter 11.03 Seam program administration.**

Service
Opens the service menu, see **Chapter 13.11 Service menu.**

11.01 Seam program input

Seam programs can be created by entering parameters in the "Creating/adjusting a seam program" function, or by sewing a sample with the "Teach in" function.
Irrespective of which function is being used, first of all it is necessary to select the program number and the basic settings of the seam program, which is to be sewn.

11.01.01 Basic settings for seam program input

In the „Creating/adjusting a program“ and the "Teach in" functions, the basic settings are the same and consist of the basic size, bottom feed stroke (feed wheel) and seam type.

- Switch on the machine.
- Select a number from 3 – 49, see **Chapter 9.07 Selecting a program number.**

- Call up the input mode.

- Call up the „Creating/adjusting a seam program“ or the "Teach in" function.

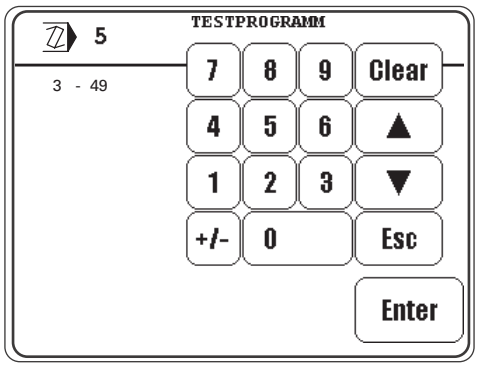

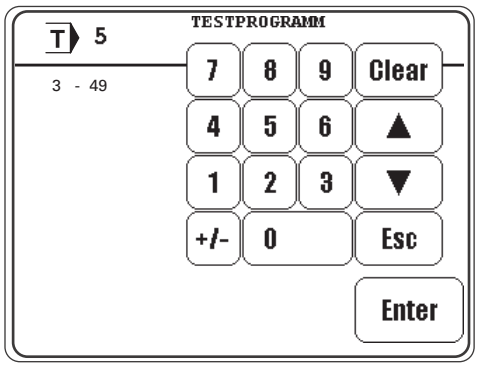

- If necessary, change the selected program number and confirm the selection.

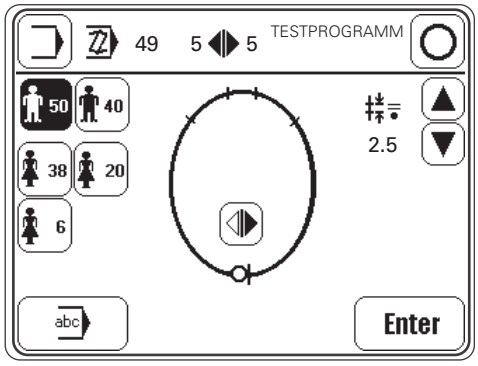

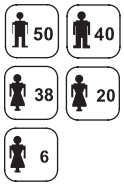

- Choose a basic size.

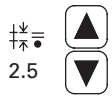

- Set the feed stroke for the feed wheel as basic stitch length.

- Set the seam type (by pressing the appropriate symbol several times until the appropriate seam type is displayed).
  Example in this case: right and left sleeve seam, beginning with the right seam.

- If applicable, enter or change a comment.

- Conclude the input of the basic settings and change to the seam section input, see **Chapter 11.01.02 Seam program input with the "Creating/adjusting a program" function** or **Chapter 11.01.03 Seam program input with the "Teach in" function.**

The input can also be concluded by calling up the sewing mode. In this case the seam program input is concluded and the machine changes to programmed sewing.

11.01.02 Seam program input with the "Creating/adjusting a program" function

With this function the seam program is entered by entering or changing the appropriate values on the control panel. This type of seam program input is particularly suitable for adjusting existing seam programs.

- Switch on the machine.
- Select a program number from 3 – 49, see **Chapter 9.07 Selecting a program number.**

- Call up the input mode.

- Call up the "Creating/adjusting a seam program" function.

- Carry out the basic settings and conclude with the "Enter" function, see **Chapter 11.01.01 Basic setting for seam program input.**

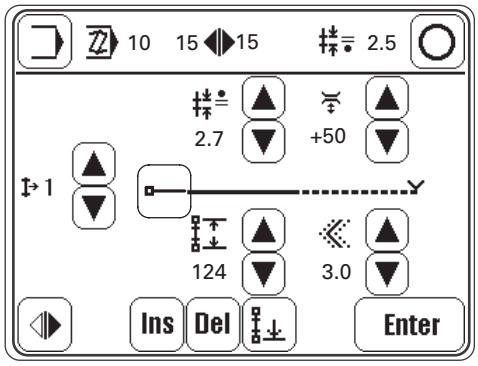

- Set the feed stroke for the roller presser.
  The difference to the feed stroke of the feed wheel (basic stitch length) determines the fullness.

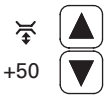

- Enter the basic value for the thread tension.
  The actual value of the thread tension is composed of this basic value and ,if applicable, the manual alteration in programmed sewing.

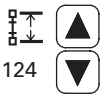

- Enter the length of the seam section.
  The length of the seam section is given in "mm". When this seam section length has been sewn, in programmed sewing the machine switches to the next seam section.

- Enter the graduated value.
  The graduated value is used to adapt different garment sizes to the programmed basic size.

- Enter the start backtacks (function at beginning of seam) see **Chapter 9.10 Entering the start and end backtacks.**

- Select a seam type.
  It is only possible to select the right or left sleeve seam if the seam type "right and left sleeve seam" was selected in the basic setting, see **Chapter 11.01.01 Basic setting for seam program input.**

- If necessary, insert the seam section.
  The current seam section is copied and all following seam sections are set one place back.

- If necessary, delete the current seam section.

- Set the seam end or program end.
  If entering only one seam (only the right or only the left sleeve seam) the program end is set in the desired seam section.
  In the same way as the program end, the seam end is set when entering the right and left sleeve seam. The seam end is set in the first sleeve seam and the program end in the second sleeve seam.

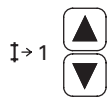

- With the use of the functions it is possible to scroll through the current seam program.
  The current seam section is displayed accordingly in addition to all the other current values.

- Conclude the input of the first seam section and change to the next seam section.

- Conclude the input and change to the input of the basic settings.

- Conclude the input and change to programmed sewing.

11.01.03 Seam program input with the "Teach-in" function

With this function the seam program is created by sewing a sample. A new program is always created, i.e. if an existing program is selected, this will be overwritten.

- Switch on the machine.
- Select a program number from 3 – 49, see **Chapter 9.07 Selecting a program number.**

- Call up the input mode.

- Call up the "Teach in" function.

- Carry out the basic settings and conclude with the "Enter" function, see **Chapter 11.01.01 Basic setting for seam program input.**

Before sewing starts the following displays and functions appear on the screen.

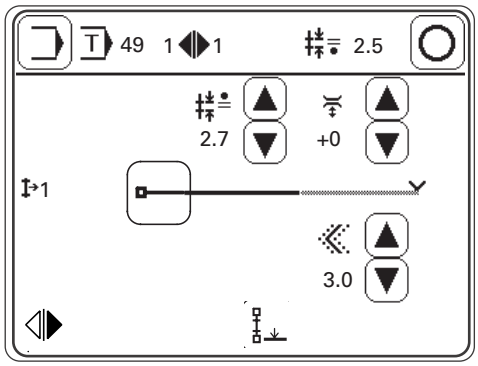

- Set the top feed stroke (roller presser).
  The difference to the feed stroke of the feed wheel (basic stitch length) determines the fullness.

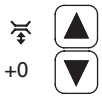

- Enter the basic value for the thread tension.
  The actual value of the thread tension is composed of this basic value and ,if applicable, the manual alteration in programmed sewing.

- Enter the graduated value.
  The graduated value is used to adapt different garment sizes to the programmed basic size.

- Enter the start backtacks (function at beginning of seam) see **Chapter 9.10 Entering the start and end backtacks.**

- Sew the first seam section using the pedal function.
  The length of the seam section is calculated from the stitch length and the number of stitches and is shown on the display in millimetres.

After sewing the following displays and functions appear on the screen.

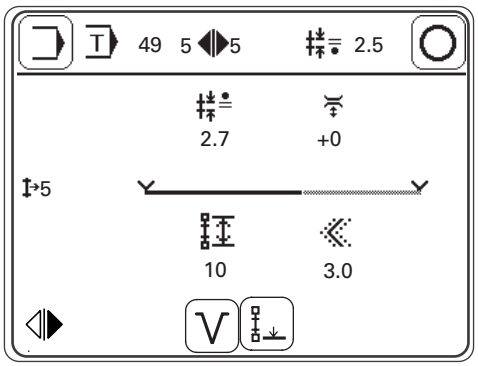

- Switch to next seam section.
  The switch to the next seam section can be effected,
  by operating the appropriate function ("cut-in marking") or
  by pressing the knee switch (if parameter "201" is set accordingly).

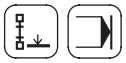

- Set the seam end or program end.
  If entering only one seam (only the right or the left) the program end is set in the desired seam section.
  In the same way as the program end, the seam end is set when entering the right and left seam. The seam end is set in the first seam and the program end in the second seam.

- Conclude the input and change to the input of the basic settings.

- Conclude the input and change to programmed sewing.

11.02 Examples of how to create seam programs

11.02.01 Example of a seam program input using the "Creating/adjusting a program" function

The seam program to be created should
- consist of a right and a left sleeve seam (beginning with the right)
- contain 2 seam sections
- be based on a basic size 50 (German men's size)
- have a basic stitch length of 2.5 mm
- be stored under the program number "10" with the comment "seam 1".

- Switch on the machine.

- Select the program number "10", see **Chapter 9.07 Selecting a program number.**

- Call up the input mode.

- Call up the "Creating/adjusting a seam program" function.

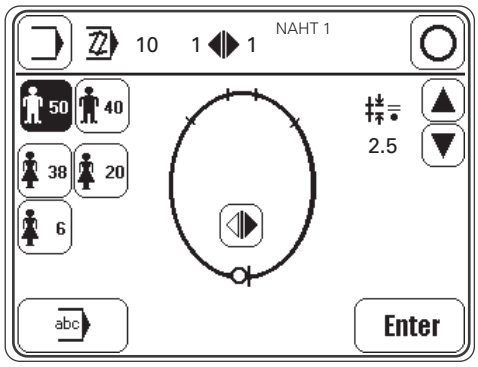

- Set the basic size "50".

- Set the feed stroke "2.5" as the basic stitch length for the feed wheel.

- Set the seam type (left and right seam, beginning with right) by pressing until the appropriate symbol appears.

- Call up the menu for comment input.

- Enter the comment with the keyboard and number panel.

- Conclude comment input.

- Change to input of the first seam section.

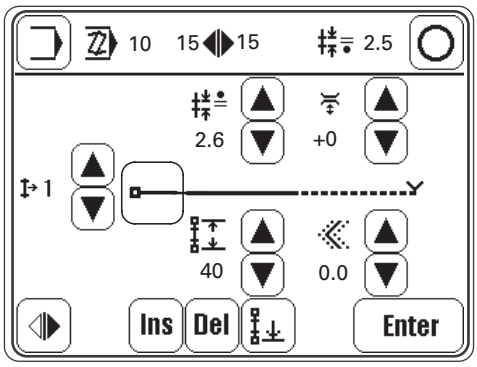

In the first seam section
- the seam length should be 50 mm and
- the roller presser should work with a feed stroke (stitch length) of 2.6 mm.

2.6 ● Select the value 2.6 for the feed stroke (stitch length) of the roller presser.

50 ● Enter the value "50" as the length of the seam section.

Enter ● Change to input of the second seam section.

In the second seam section
- the seam length should be 30 mm and
- the roller presser should work with a feed stroke (stitch length) of 2.6 mm.

2.6 ● Select the value 2.6 for the feed stroke (stitch length) of the roller presser.

30 ● Enter the value "30" as the length of the seam section.

● Activate the "end of seam" function.

Enter ● Change to input of second seam (left seam).

● Enter the seam sections of the left seam in the same way as the above seam sections.

● Activate the "end of program" function.

● Conclude the seam program input and change to the programmed sewing mode.

11.02.02 Example of a seam program input using the "Teach in" function

The seam program to be created should
- consist of a right and a left sleeve seam (beginning with the right)
- contain 2 seam sections
- be based on a basic size 50 (German men's size)
- have a basic stitch length of 2.4 mm
- be stored under the program number "5" with the comment "LEARN".

- Switch on the machine.

- Select the program number "5", see **Chapter 9.07 Selecting a program number.**

- Call up the input mode.

- Call up the "Teach in" function.

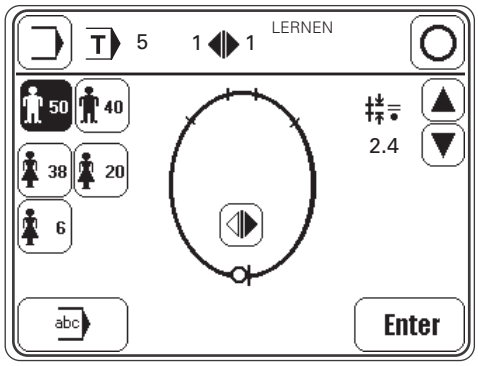

- Set the basic size "50".

- Set the feed stroke "2.4" as the basic stitch length for the feed wheel.

- Set the seam type (right and left sleeve seam, beginning with right) by pressing the appropriate symbol several times until the corresponding seam type appears.

- Call up the menu for comment input.

- Enter the comment with the keyboard and number panel.

- Conclude comment input.

- Change to input of the first seam section.

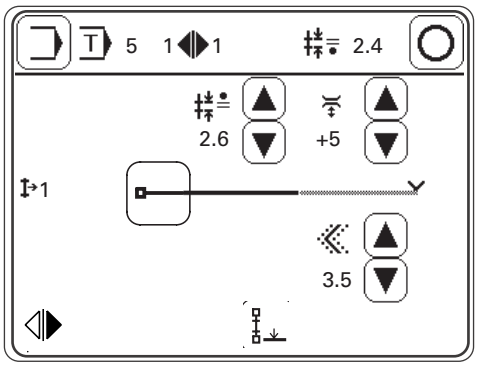

In the first seam section
- the graduation value should be "3.5",
- the roller presser should work with a feed stroke (stitch length) of 3.0 mm and
- the thread tension should be "+5".

- Select the value 3.0 for the feed stroke (stitch length) of the roller presser.

- Select the graduation value "3.5".

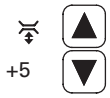

- Set the thread tension at "+5".

- Sew the first seam section with the pedal function.

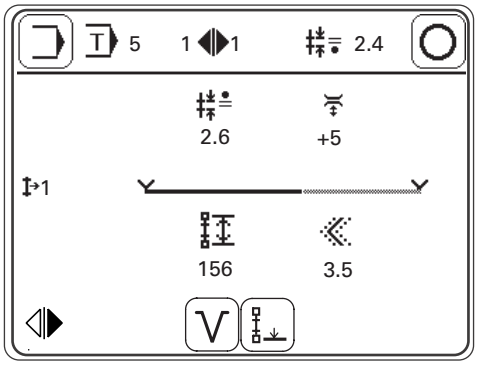

- Change to input of second seam section.

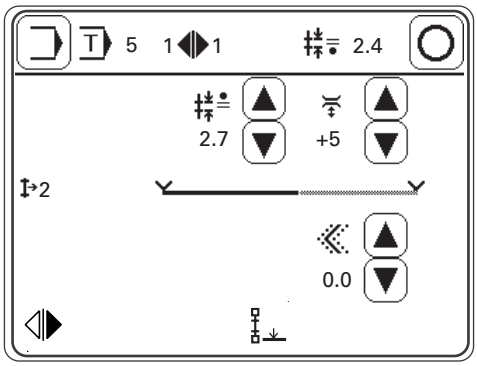

In the second seam section
- the graduation value should be "0",
- the roller presser should work with a feed stroke (stitch length) of 2.7 mm and
- the thread tension should be "+5".

- Select the value 2.7 for the feed stroke (stitch length) of the roller presser.

- Select the graduation value "0.0".

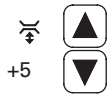

- Set the thread tension at "+5".

- Sew the second seam section with the pedal function.

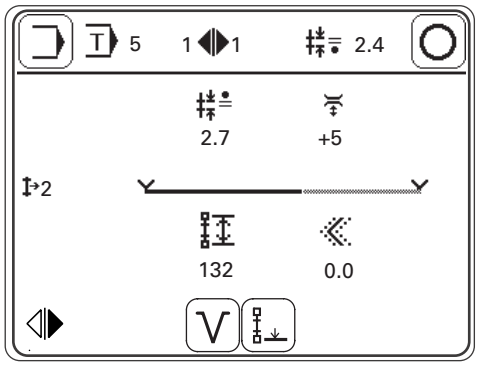

- Activate the "end of seam" function.

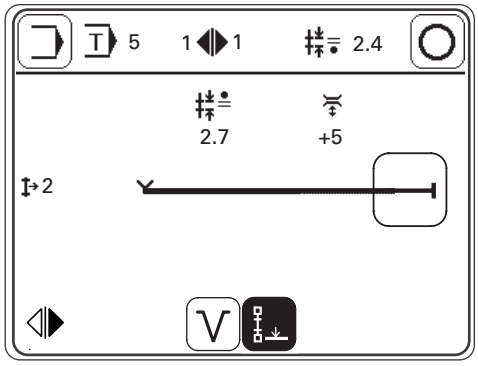

- By operating the pedal, carry out the thread trimming function, see **Chapter 7.03 Pedal.**
  The machine changes to the input of the second sleeve seam:

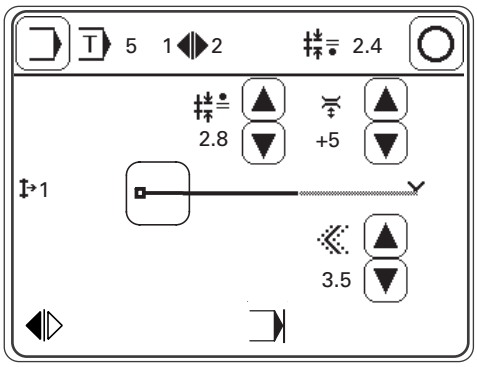

In the first seam section
- the graduation value should be "3.5",
- the roller presser should work with a feed stroke (stitch length) of 2.8 mm and
- the thread tension should be "+5".

● Select the value 2.8 for the feed stroke (stitch length) of the roller presser.

● Select the graduation value "3.5".

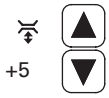

● Set the thread tension at "+5".

● Sew the first seam section with the pedal function.

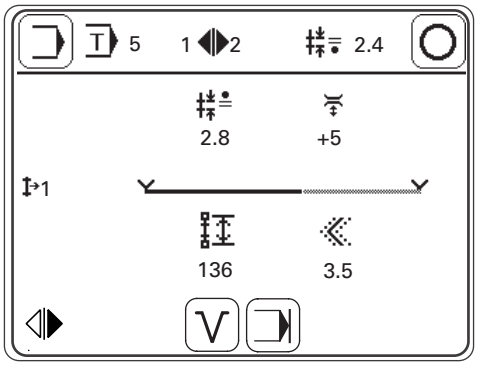

● Change to input of second seam section.

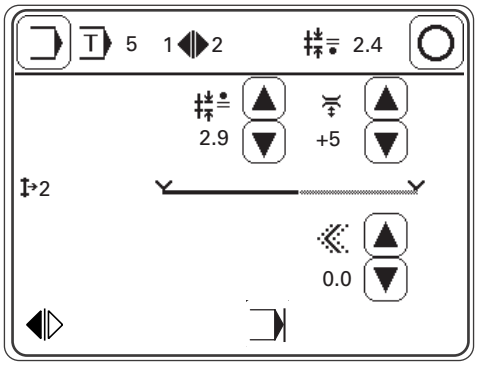

In the second seam section
- the graduation value should be "0",
- the roller presser should work with a feed stroke (stitch length) of 2.9 mm and
- the thread tension should be "+5".

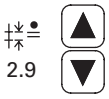

● Select the value 2.9 for the feed stroke (stitch length) of the roller presser.

● Select the graduation value "0.0".

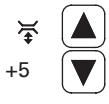

● Set the thread tension at "+5".

- Sew the second seam section with the pedal function.

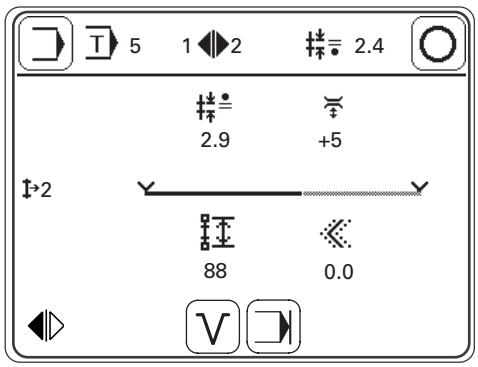

- Activate the "end of program" function.

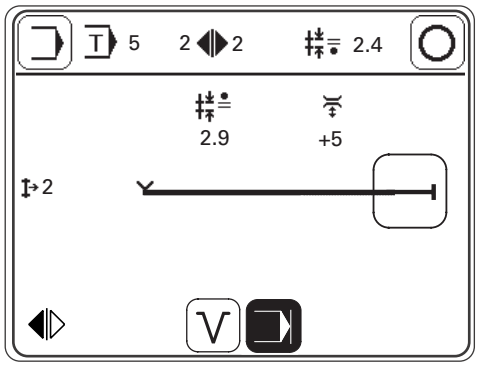

- By operating the pedal, carry out the thread trimming function, see **Chapter 7.03 Pedal.**

- Conclude the seam program input and change to the programmed sewing mode.

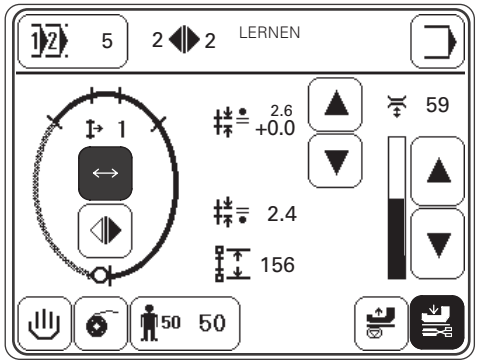

11.03 Seam program administration

In the program administration the seam programs deposited in the machine memory are displayed and can be deleted or copied.

- Switch on the machine.

- Call up the input mode.

- Call up program administration.

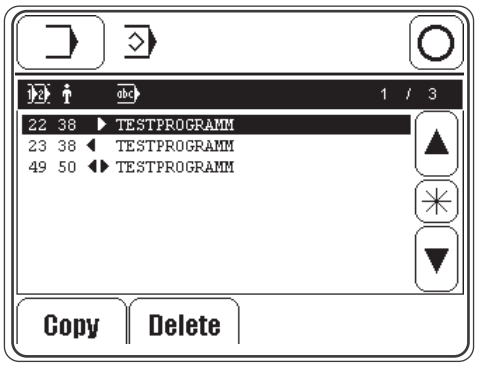

Explanation of the functions

Input mode
Calls up the basic display for the input mode.

Sewing mode
Quit input mode and call up sewing mode.

Program selection
After the program administration has been selected, at least one seam program is always marked. Using the arrow functions, the desired seam program can be selected. With the *-function and the arrow functions a seam program block can be marked. By pressing the *.function again, the block function is deactivated.

Copy
Selected seam programs are copied.

Delete
Selected seam programs are deleted.

12 Care and Maintenance

Cleaning	daily, several times if in continuous operation
Oiling the hook	daily, before operation
Checking the oil levels	daily, before operation
Lubricating the bevel gears	once a year

These maintenance intervals are calculated for the average running time of a single shift operation. If the machine is operated more than this, shorter intervals are recommended.

12.01 Cleaning

Clean the hook, hook compartment and toothed wheel **3** daily, several times if in continuous use.

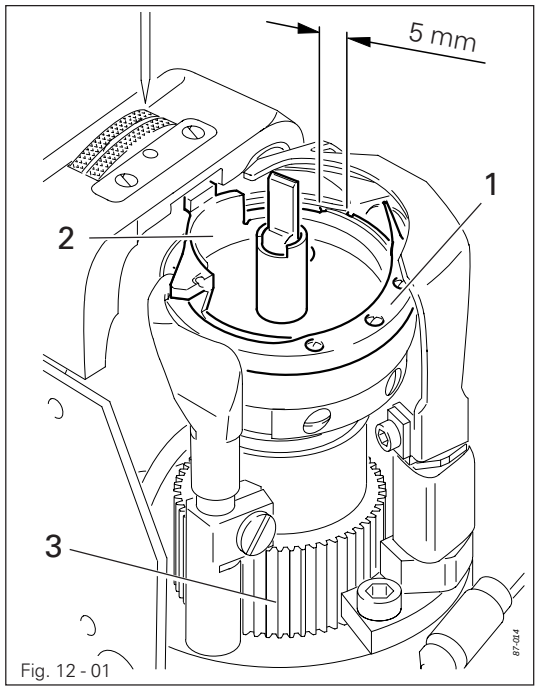

Fig. 12 - 01

Switch the machine off!
Danger of injury if the machine is started accidentally!

- Bring the needle bar to its highest position.
- Open the post cap and remove the bobbin case cap and the bobbin.
- Unscrew hook gib **1**.
- Turn the handwheel until the point of bobbin case **2** penetrates into the groove of the hook race approx. **5 mm**.
- Remove bobbin case **2**.
- Clean the hook race with paraffin.
- When inserting the bobbin case **2**, ensure that the horn of the bobbin case **2** engages in the groove of the needle plate.
- Screw hook gib **1** back on and close the post cap.

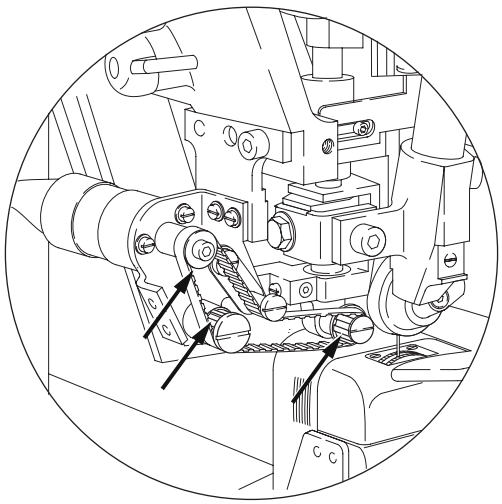

- Remove the puller cover and clean the puller gears daily, several times if in continuous operation.

12.02 Oiling the hook

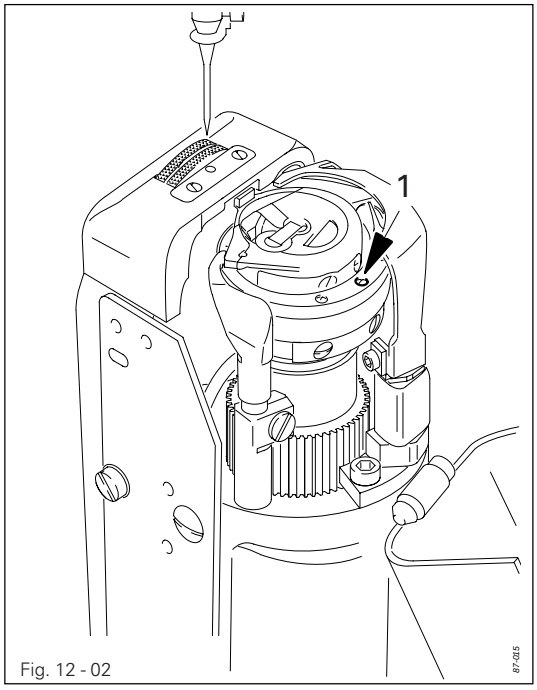

Fig. 12 - 02

Switch the machine off!
Danger of injury if the machine is started accidentally!

- Pour **1-2 drops** of oil into hole **1** of the hook gib daily.
- Before commissioning the machine, and after long periods out of operation, pour a few drops of oil into the hook race (see arrow).

12.03 Checking the oil levels

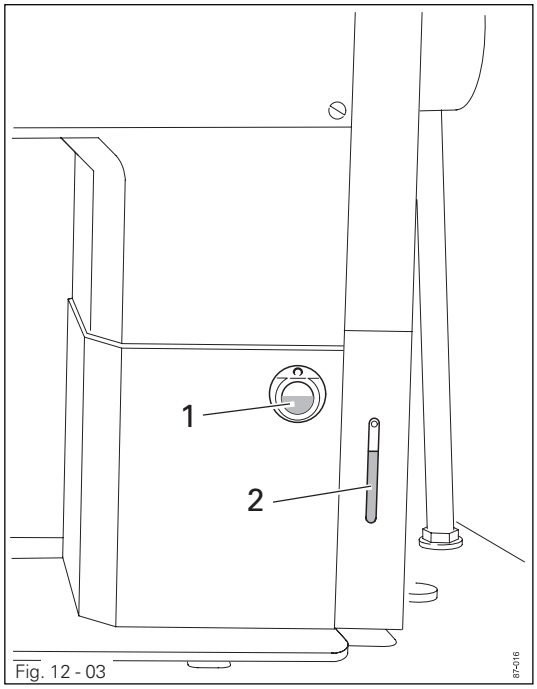

Fig. 12 - 03

Before each operation check the oil levels..

Oil must always be visible in the reserve tanks **1** and **2**.

- If necessary, fill in oil through the respective hole of the reserve tank.

Use only oil with a mean viscosity of 22.0 mm^2/s at 40°C and a density of 0.865 g/cm^3 at 15°C.

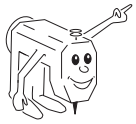

We recommend PFAFF sewing machine oil Best.-Nr. 280-1-120 144.

12.04 Lubricating the bevel gears

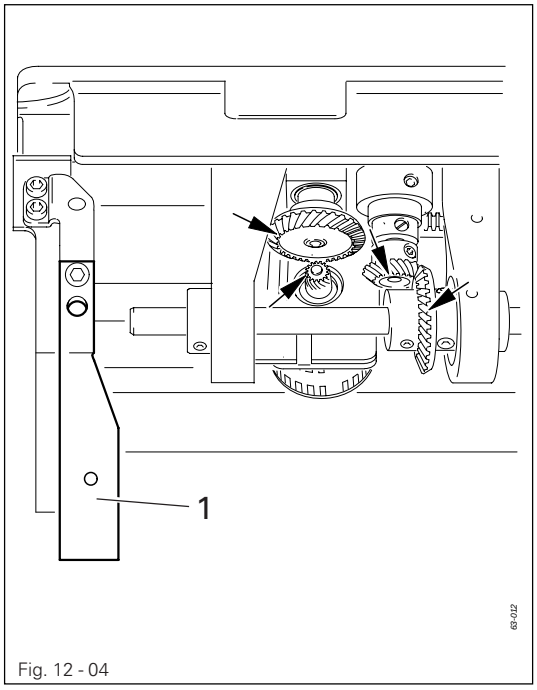

Fig. 12 - 04

Switch the machine off!
Danger of injury if the machine is started accidentally!

- All bevel gears must be supplied with new grease once a year.
- Tilt the sewing head back onto the support.
- To set the sewing head upright, press tilt lock **1** backwards and set the sewing head upright using both hands.

Use both hands to set the sewing head upright!
Danger of crushing between the sewing head and the table top!

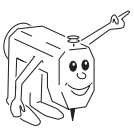

We recommend PFAFF sodium grease with a dripping point of approx. 150C, Order No. 280-1-120 243.

13 Adjustment

Unless stated otherwise, during all adjustment work the machine must be disconnected from the electric and pneumatic power supply!
Danger of injury if the machine is started accidentally!

13.01 Notes on adjustment

All following adjustments are based on a fully assembled machine and may only be carried out by expert staff trained for this purpose.
Machine covers, which have to be removed and replaced to carry out checks and adjustments, are not mentioned in the text.
The order of the following chapters corresponds to the most logical work sequence for machines which have to be completely adjusted. If only specific individual work steps are carried out, both the preceding and following chapters must be observed.
Screws, nuts indicated in brackets ( ) are fastenings for machine parts, which must be loosened before adjustment and tightened again afterwards.

For the generally valid adjustments in this adjustment manual, illustrations of the PFAFF 3834-14/11 are used. These can be applied to the PFAFF 3834-14/31 in each of the relevant cases. Any special adjustments are indicated in the title.

13.02 Tools, gauges and other accessories

- 1 set of screwdrivers with blade widths from 2 to 10 mm
- 1 set of wrenches with jaw widths from 7 to 13 mm
- 1 set of Allen keys from 1.5 to 6 mm
- 1 metal ruler (part no. 08-880 218-00)
- 1 locking pin for needle bar rise (part no. 61-111 641-39)
- Needles, system 134-35 R
- Threads and test material.

13.03 Abbreviations

TDC = top dead center
BDC = bottom dead center

13.04 Adjusting the basic machine

13.04.01 Positioning the needle in the direction of sewing

Requirement
The needle must penetrate the middle of the needle hole as viewed in the direction of sewing.

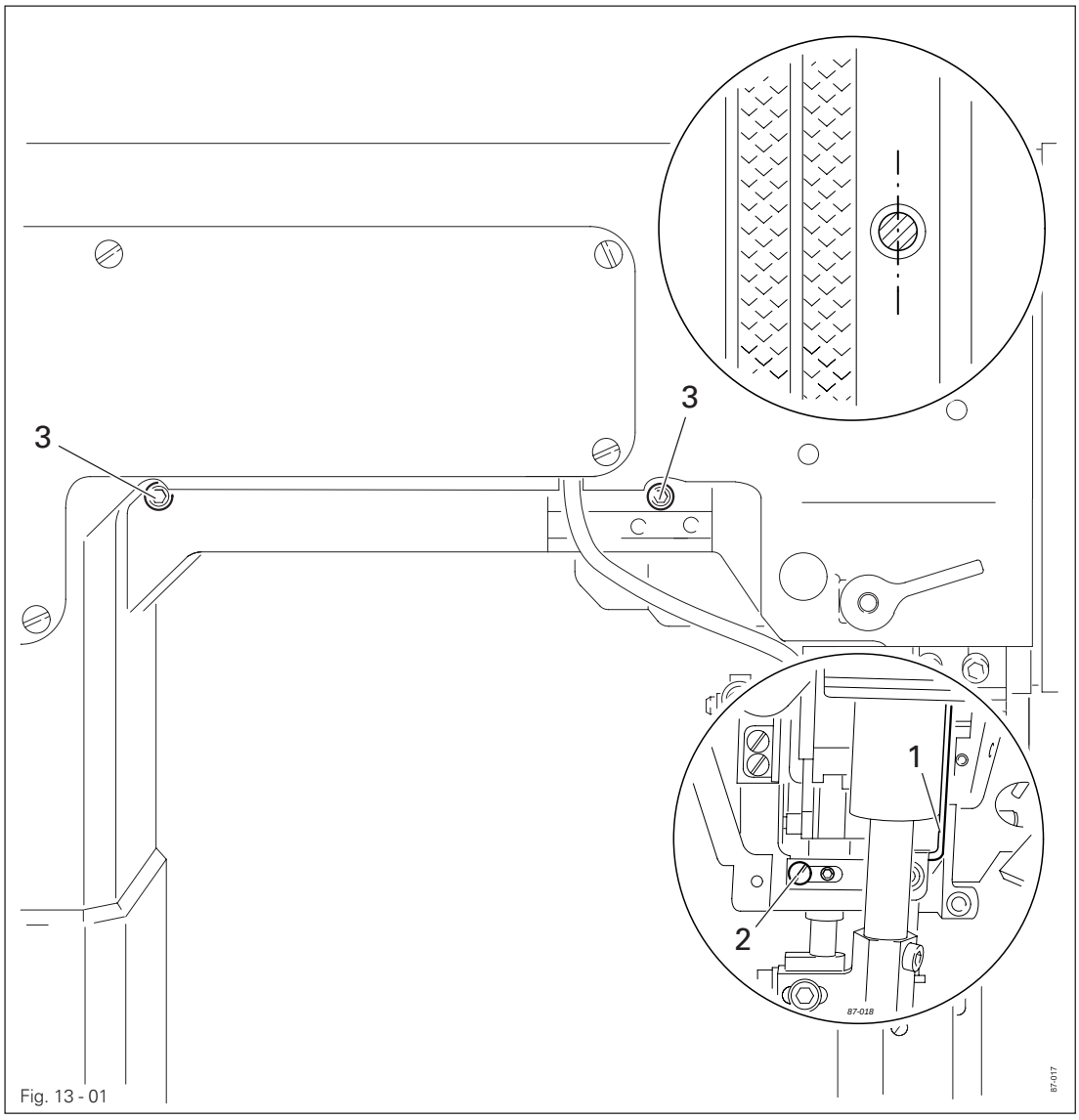

Fig. 13 - 01

- Move the needle bar frame **1** (screws **2** and **4** and nut **3**) in accordance with the **requirement.**

Screws **4** are accessible through the holes on the back of the housing.

13.04.02 Positioning the needle across the direction of sewing

Requirement
The needle must penetrate the middle of the needle hole as viewed across the direction of sewing.

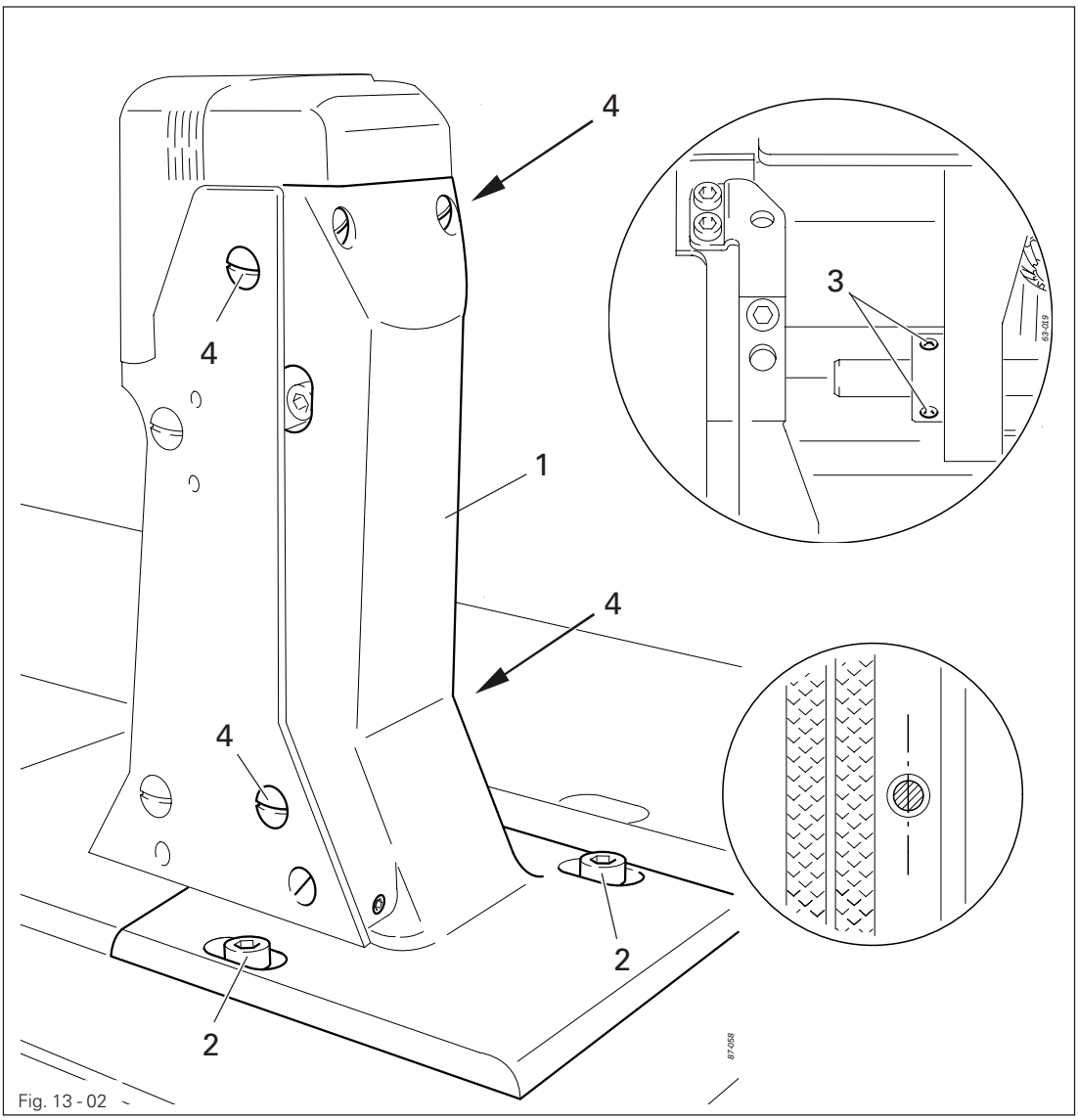

Fig. 13 - 02

- Move the feed wheel post **1** (screws **2** and **3**) in accordance with the **requirement.**

Screws **3** remain loosened for the following adjustments.

13.04.03 Preadjusting the needle height

Requirement
With the needle bar at TDC there must be approx. **21 mm** between the point of the needle and the needle plate.

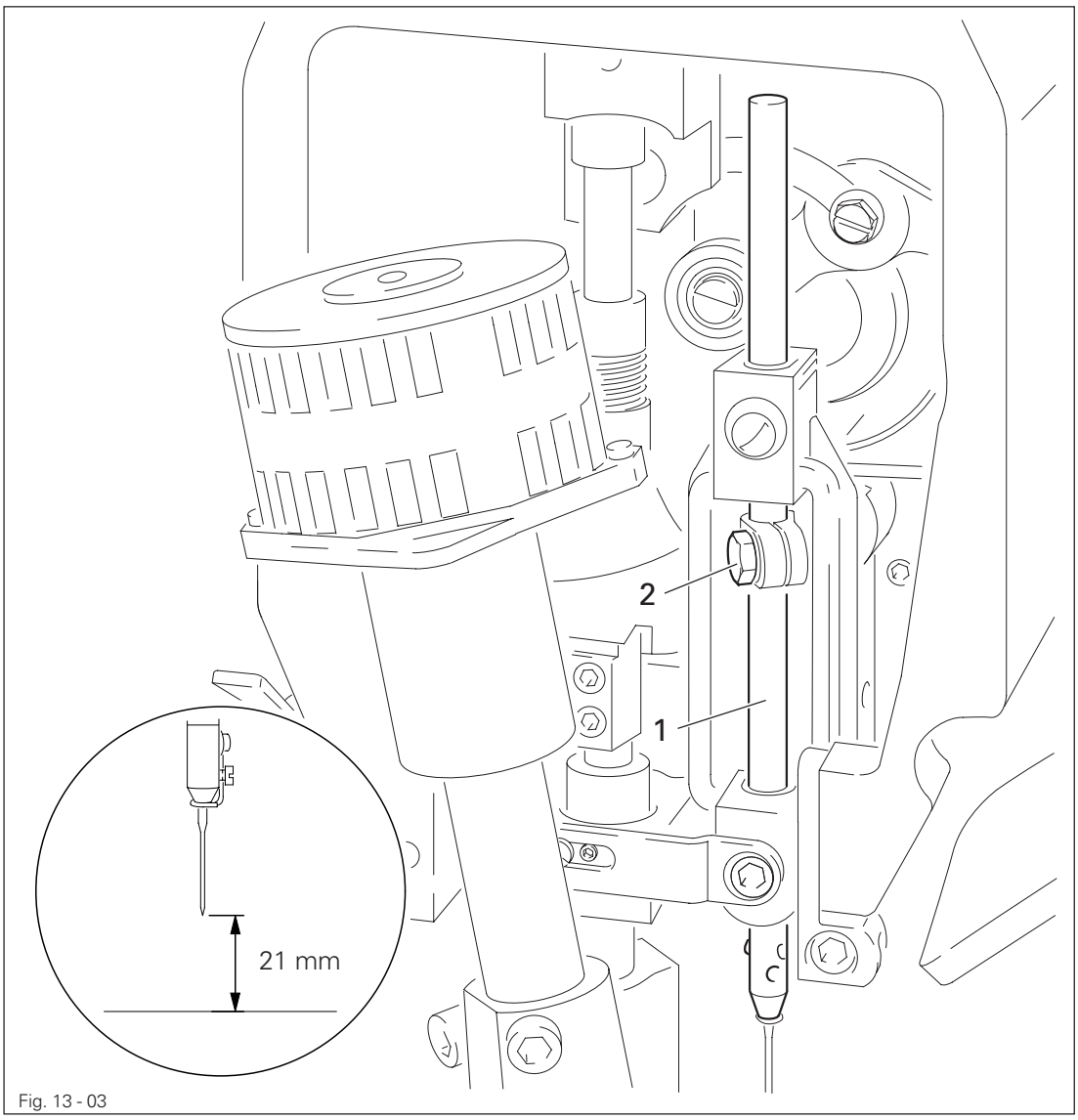

Fig. 13 - 03

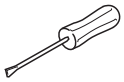

- Move the needle bar **1** (screw **2**) in accordance with the **requirement** without turning it.

13.04.04 Needle rise, hook-to-needle clearance, needle height and needle guard

Requirement

When the needle bar is positioned at 2.0 mm after b.d.c.

1. The point of the hook must be pointing to the centre of the needle and have a clearance of **0.05 - 0.1 mm** to the needle.
2. The top edge of the needle eye must be **0.8 - 1.00 mm** below the hook point and
3. The needle guard **6** must lightly touch the needle.

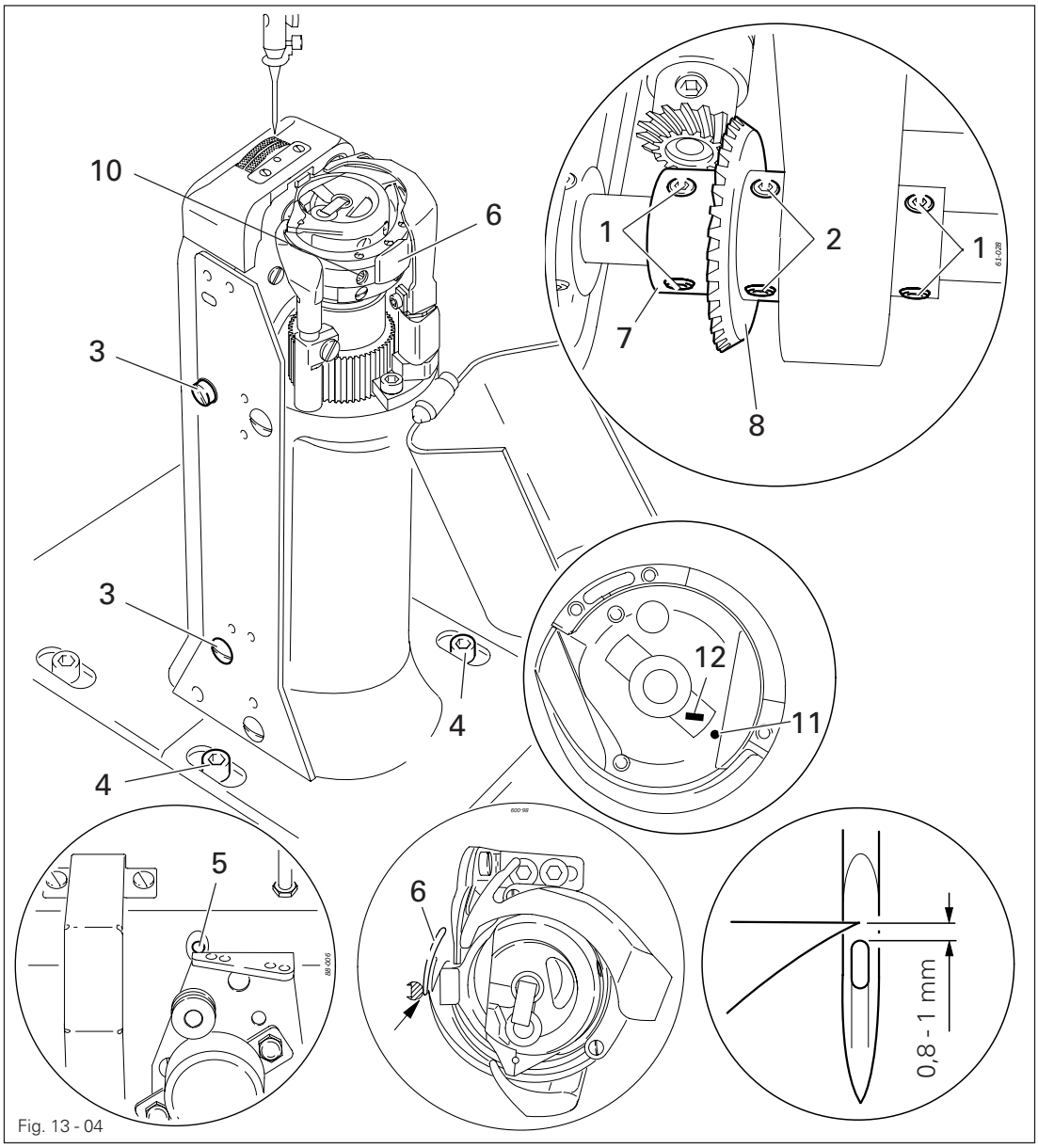

Fig. 13 - 04

- Loosen screws **1, 2, 3** and **4**.
- Bring the needle bar to 2.0 after b.d.c.
- Place the adjustment pin in hole **5** and apply pressure.
- Position the hook point towards the centre of the needle, taking care to ensure that the needle is not deflected by needle guard **6**.
- Adjust the needle height according to **requirement 2**.
- Adjust the hook post according to **requirement 1** and tighten screws **4**.

- Taking the play of the bevel gear into account, tighten screws 2.
- Remove the adjustment pin from hole 5.
- Install the retaining collar 7 on bevel gear 8 and tighten screws 1.
- Tighten screws 3 on both sides of the post.
- Align needle guard 6 in accordance with requirement 3.

When changing the hook, care must be taken to ensure that the markings 11 and 12 are on one side.

13.04.05 Height and stroke of the bobbin case opener

Requirement

1. The top edges of the bobbin case opener **1** and bobbin case base **3** should be on one level.
2. When the bobbin case opener **1** has deflected the bobbin case to its furthest point, the catch of the bobbin case should be **0.3 - 0.5 mm** from the back edge of the needle plate recess.

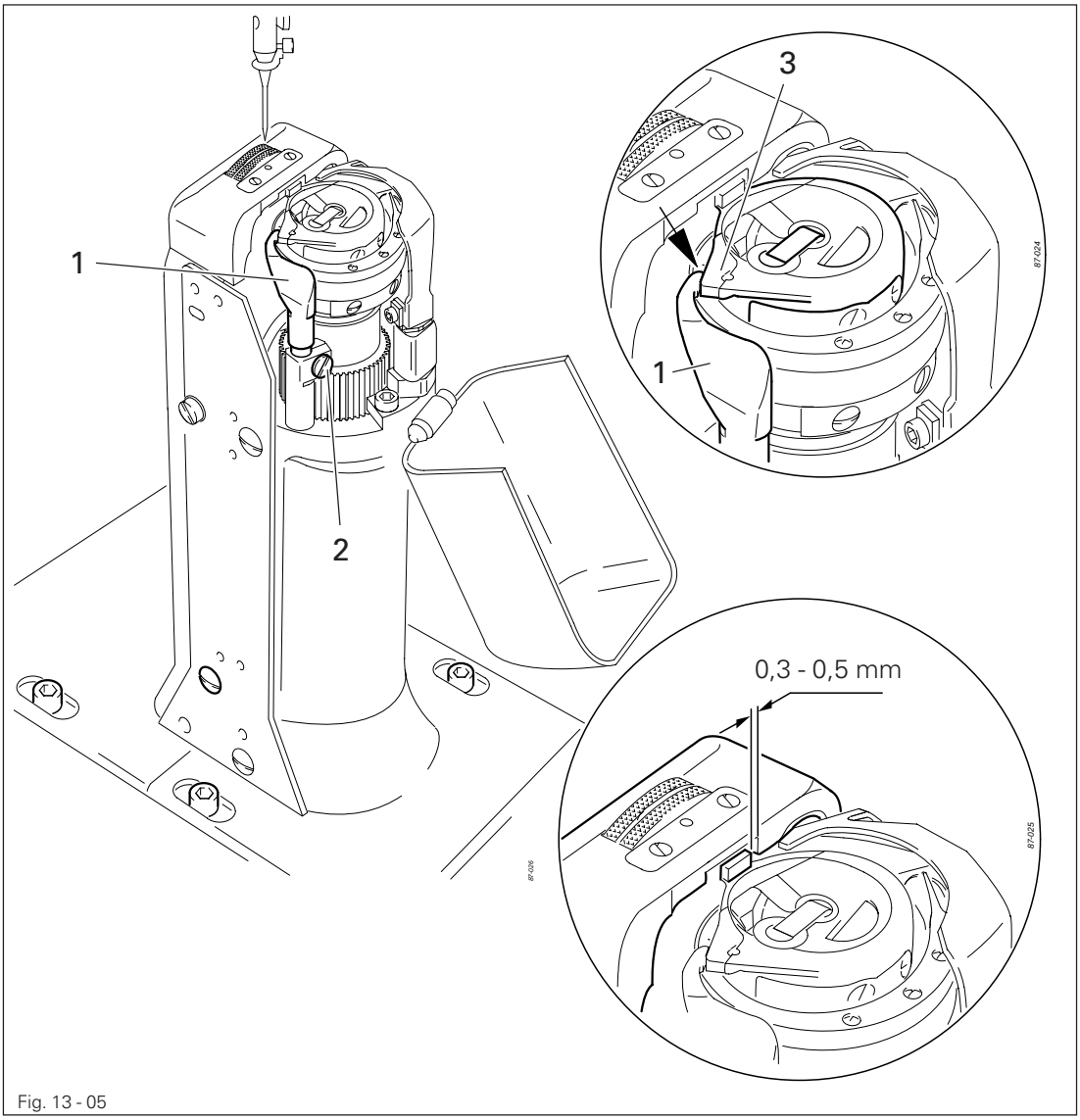

Fig. 13 - 05

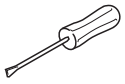

- Adjust bobbin case opener **1** (screw **2**) in accordance with **requirement 1.**
- Turn the balance wheel until the bobbin case opener has deflected the bobbin case to its furthest point.
- Adjust bobbin case opener **1** (screw **2**) in accordance with **requirement 2.**

Depending on the thread size, a variation of the setting in **Requirement 2** is permitted.

13.04.06 Height of the feed wheel

Requirement
The feed wheel should jut **0.4 mm** out of the needle plate.

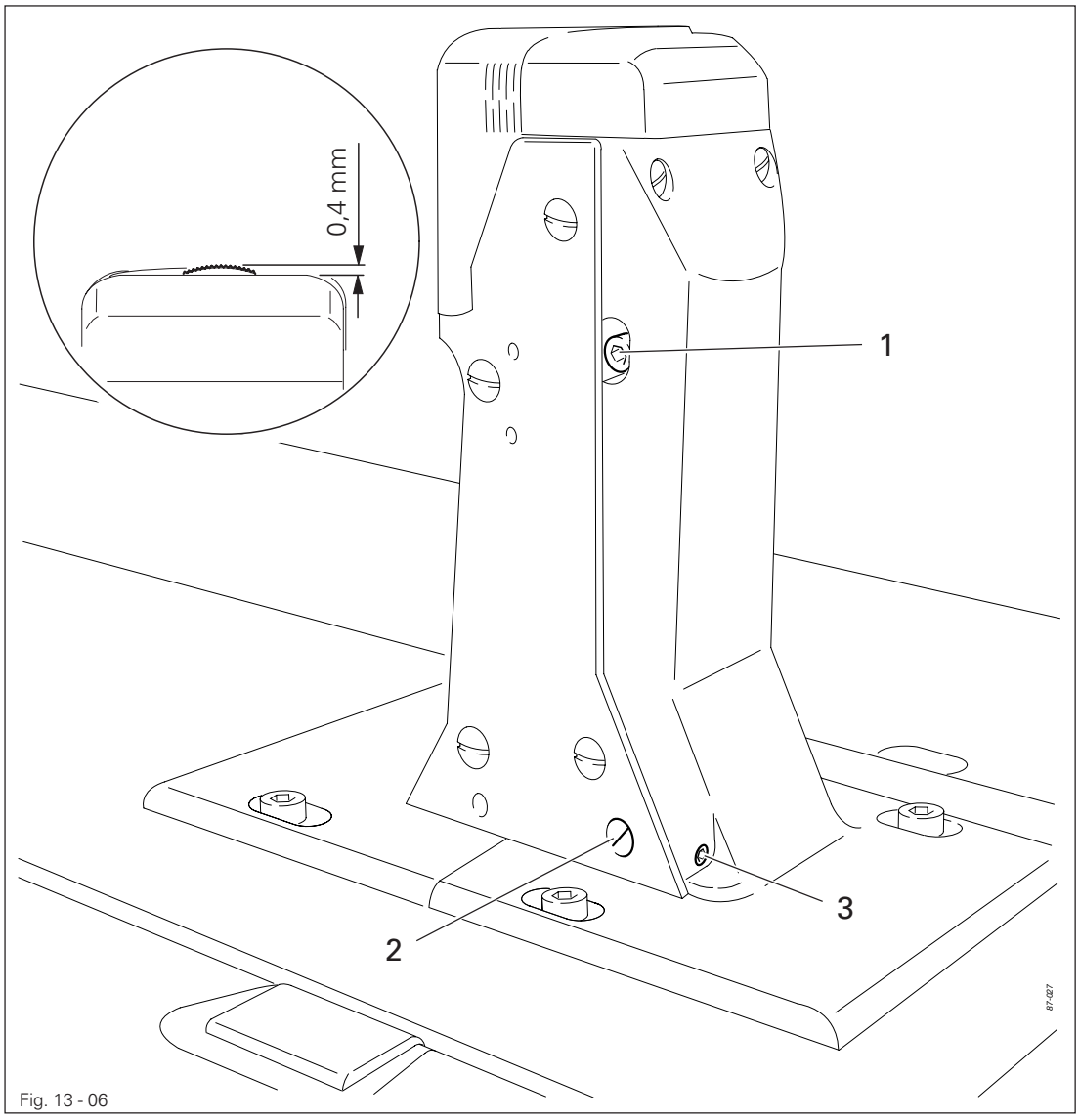

Fig. 13 - 06

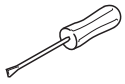

- Swing out the roller presser.
- Loosen screw **1.**
- Adjust the eccentric (screw **3**), which is accessible through hole **2**, in accordance with the **requirement.**
- Tighten screw **1.**

13.04.07 Clearance between roller presser and feed wheel

Requirement
When lever **1** is raised, the clearance between feed band and feed wheel should be **7 mm.**

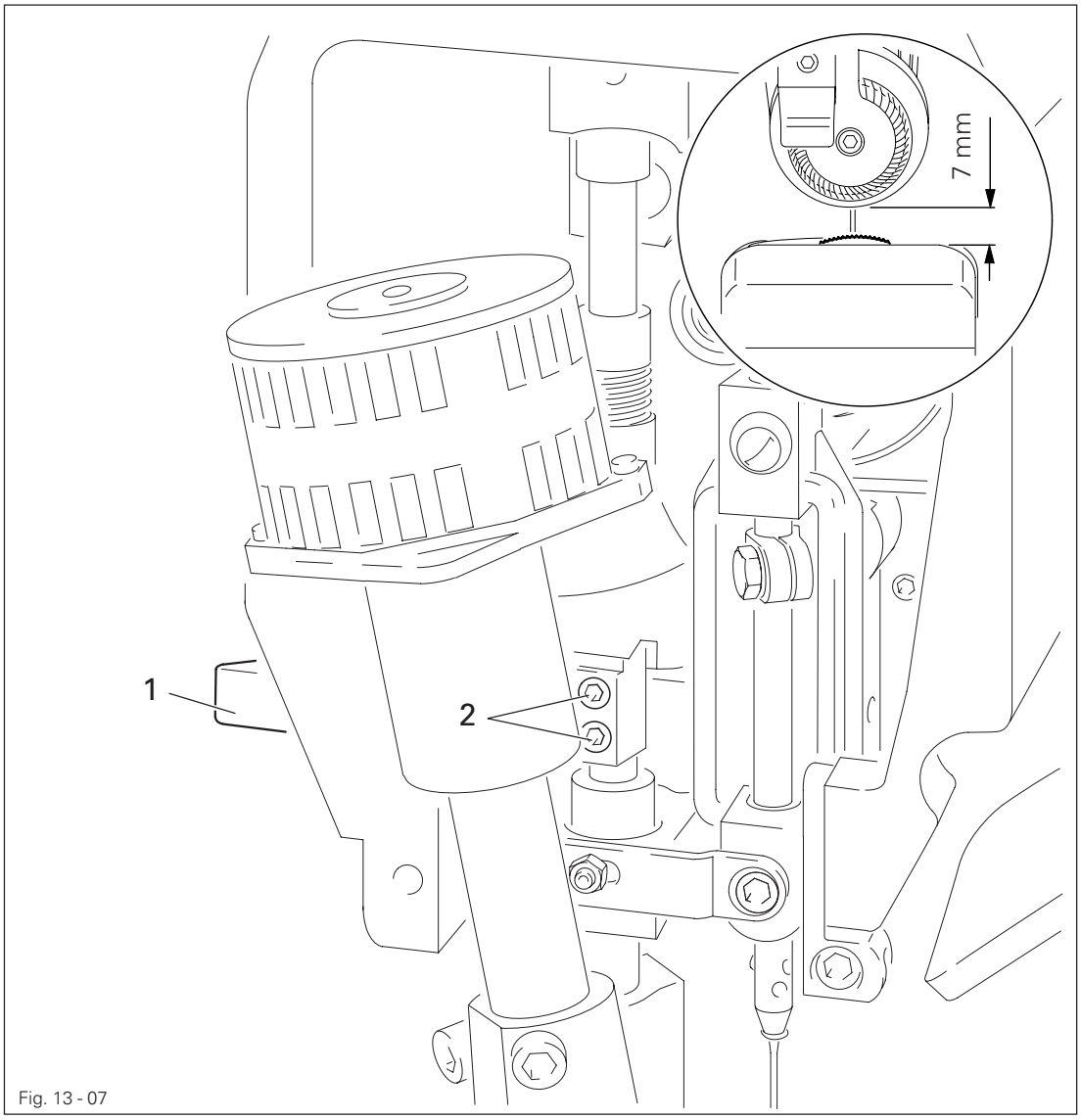

Fig. 13 - 07

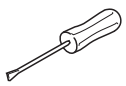

- Raise lever **1.**
- Adjust the presser bar (screws **2**) in accordance with the **requirement,** making sure that the roller presser is parallel to the feed wheel.

13.04.08 Roller presser

Requirement

When the roller presser **1** touches the feed wheel **6**,

1. Seen in the direction of sewing, the roller presser should be parallel to the feed wheel **6**,
2. Seen in the direction of sewing, the centre of the roller presser should be **approx. 2 mm** in front of the needle,
3. Seen crosswise to the direction of sewing, the roller presser should be as close as possible to the needle.

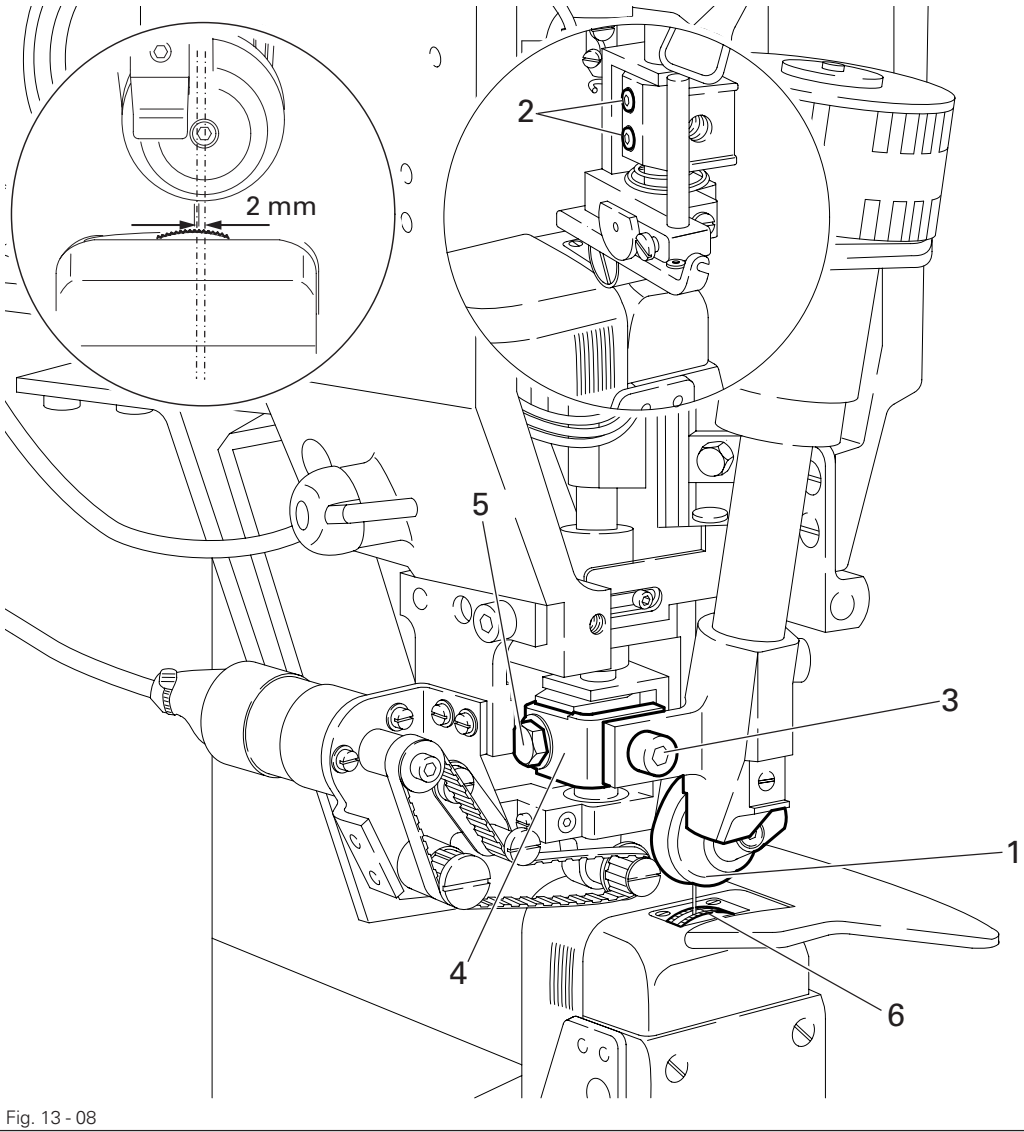

Fig. 13 - 08

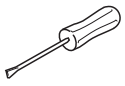

- Raise the roller presser **1**.
- Adjust roller presser **1** (screw **2** and **3**) in accordance with **requirement 1** and **2**.
- Adjust bracket **4** (screw **5**) in accordance with **requirement 3**.

13.04.09 Puller (only on the PFAFF 3834-14/31)

Requirement

The puller **1** should be positioned horizontally to the needle plate and the toothed belt of the puller should move freely.

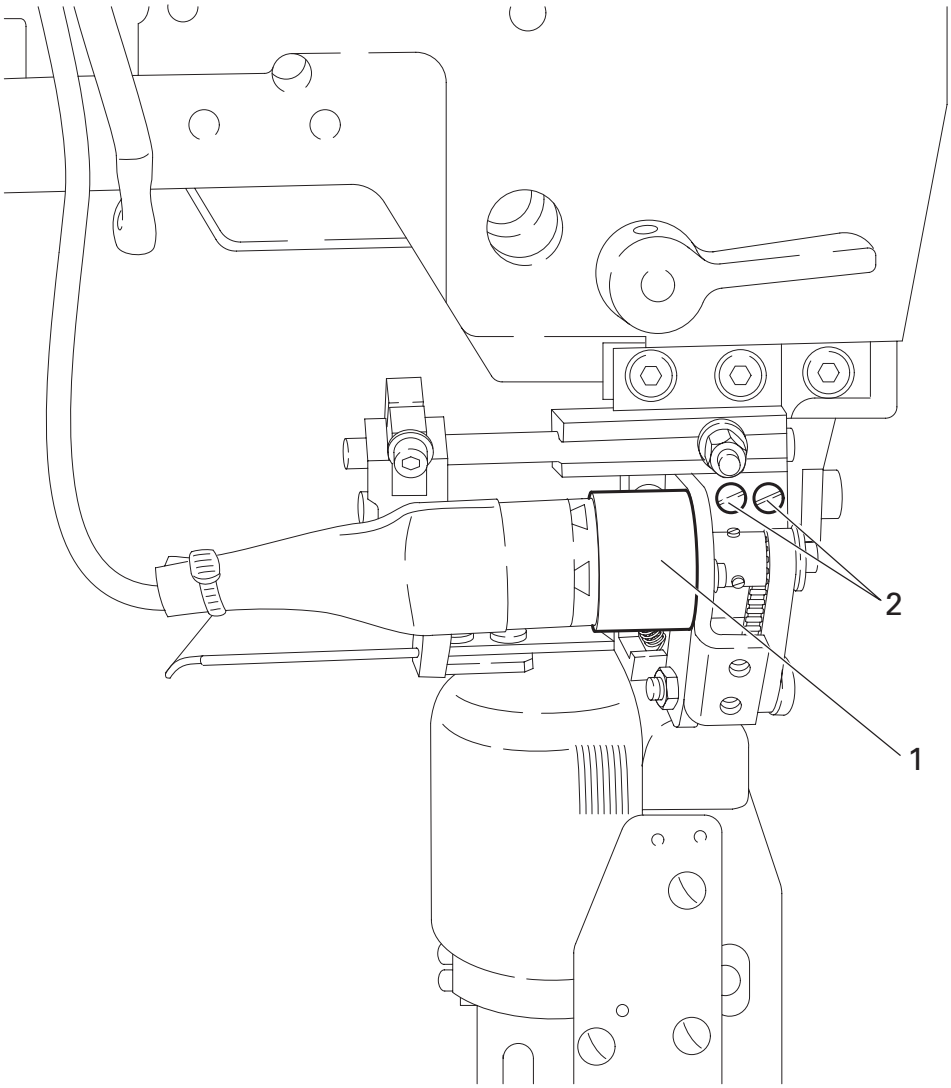

Fig. 13 - 09

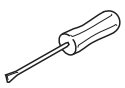

- Adjust puller **1** (screws **2**) in accordance with the **requirement.**

13.04.10 Roller presser height level switch

Requirement

1. There should be a space of **approx. 1 mm** between switch **1** and retaining collar **5**.
2. When the roller presser is raised **approx. 3mm** with the hand lever, the diode **6** of switch **1** should light up.

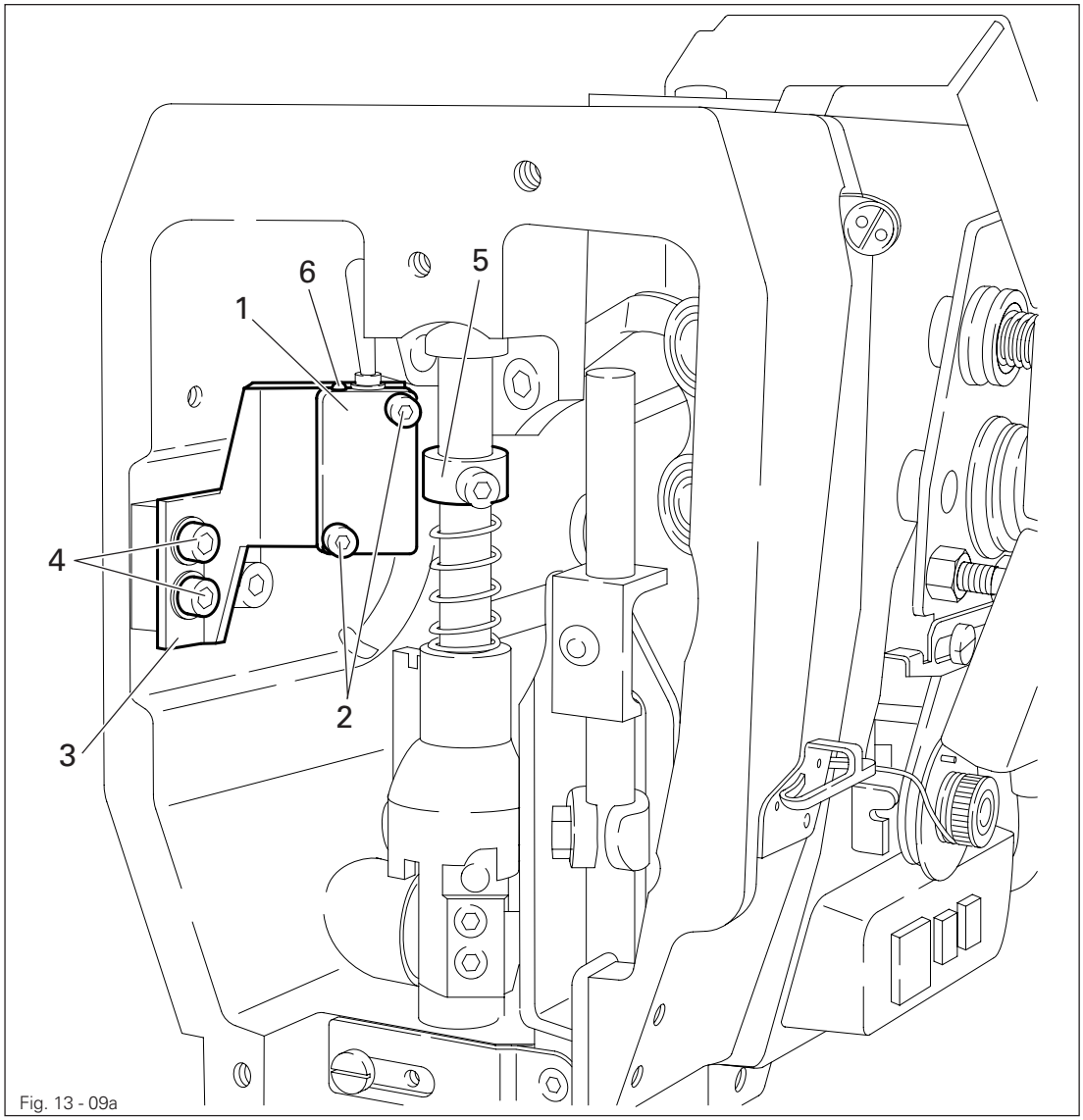

Fig. 13 - 09a

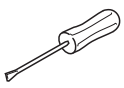

- Switch on the machine.
- Adjust switch **1** (screws **2**) in accordance with **requirement 1**.
- Adjust bracket **3** (screws **4**) in accordance with **requirement 2**.

The height adjustment of switch **1** defines from which material thickness the increased thread tension becomes effective. This adjustment may therefore differ depending on the material.

13.04.11 Automatic presser foot lift

Requirement
When solenoid **1** is activated, lever **3** should drop automatically to raise the roller presser.

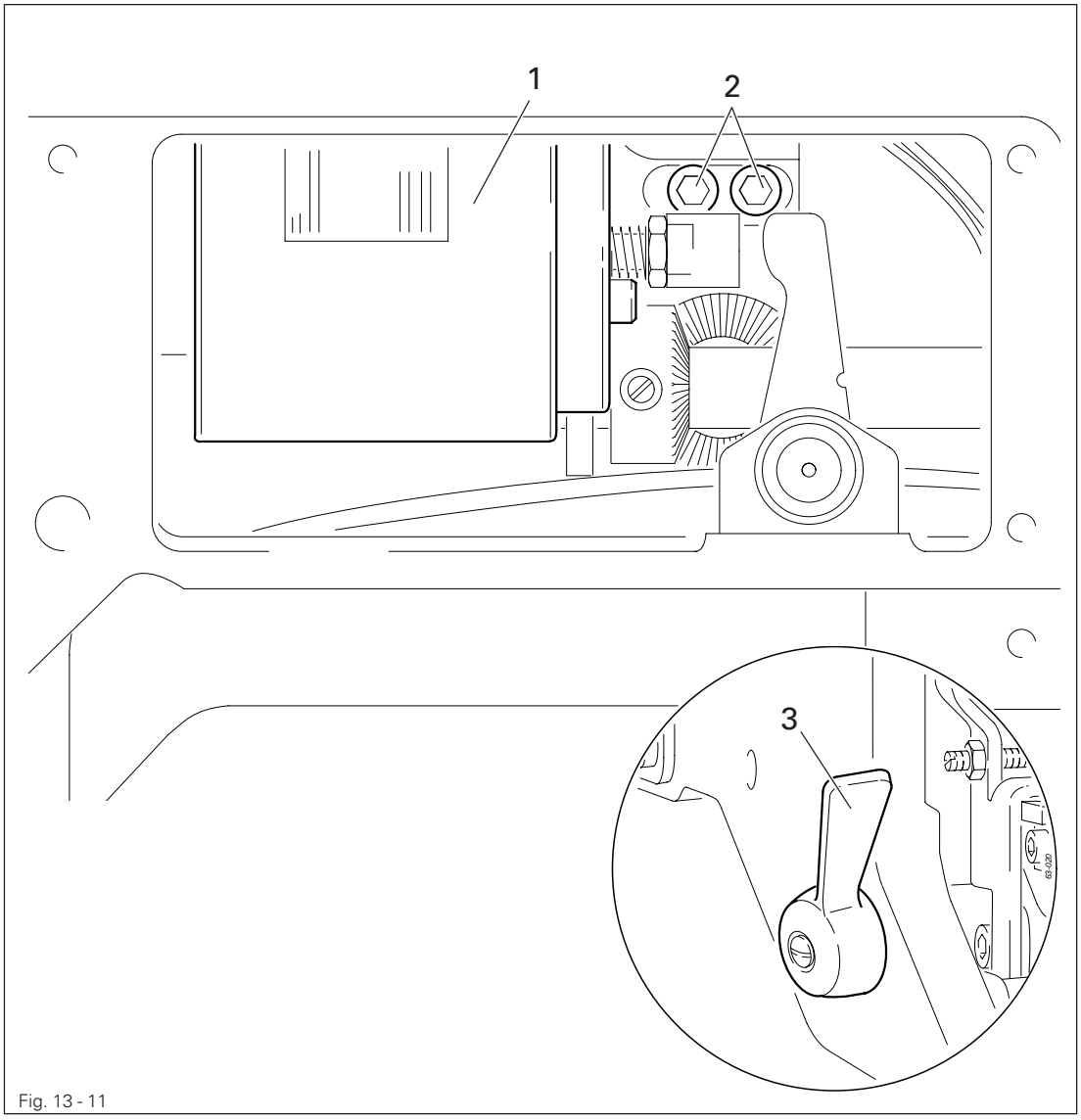

Fig. 13 - 11

- Adjust solenoid **1** (screws **2**) in accordance with the **requirement.**
- Switch on the machine and check the **requirement.**
- Switch off the machine.

Depending on the material thickness, the clearance between roller presser and feed wheel can be increased up to **10 mm** by moving the solenoid **1** to the right.

13.04.12 Retainer

Requirement
The retainer **3** should just rest on the material, so that the material does not start fluttering during sewing.

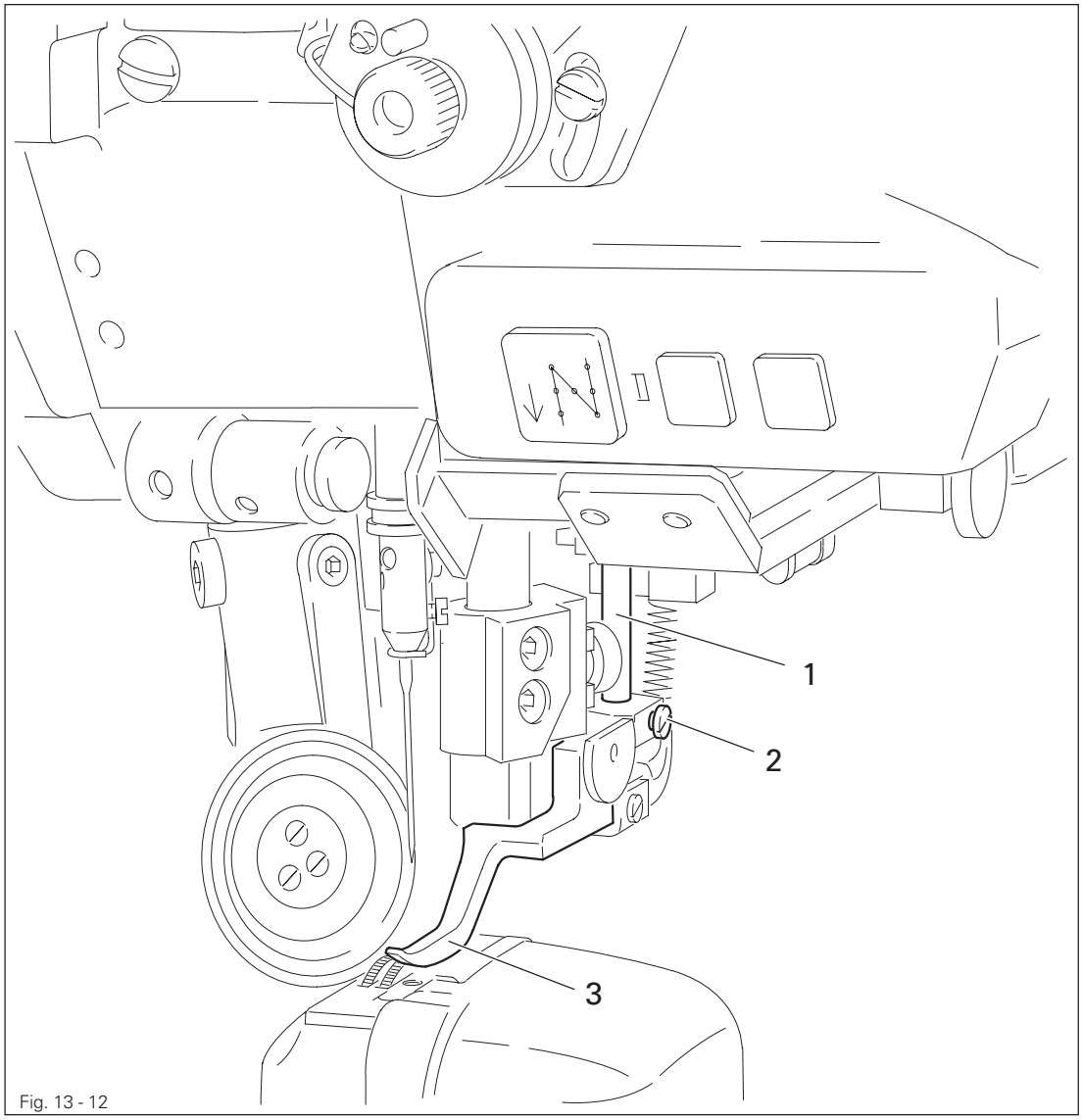

Fig. 13 - 12

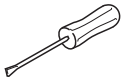

- Adjust pin **1**(screw **2**) according to the **requirement**.

13.04.13 Thread check spring

Requirement

1. The motion of the thread check spring **7** must be completed when the needle point enters the material (spring stroke approx. **7 mm**).
2. With the thread loop at its largest when it is guided around the hook, the thread check spring must be raised slightly above the workpiece rack **1**.

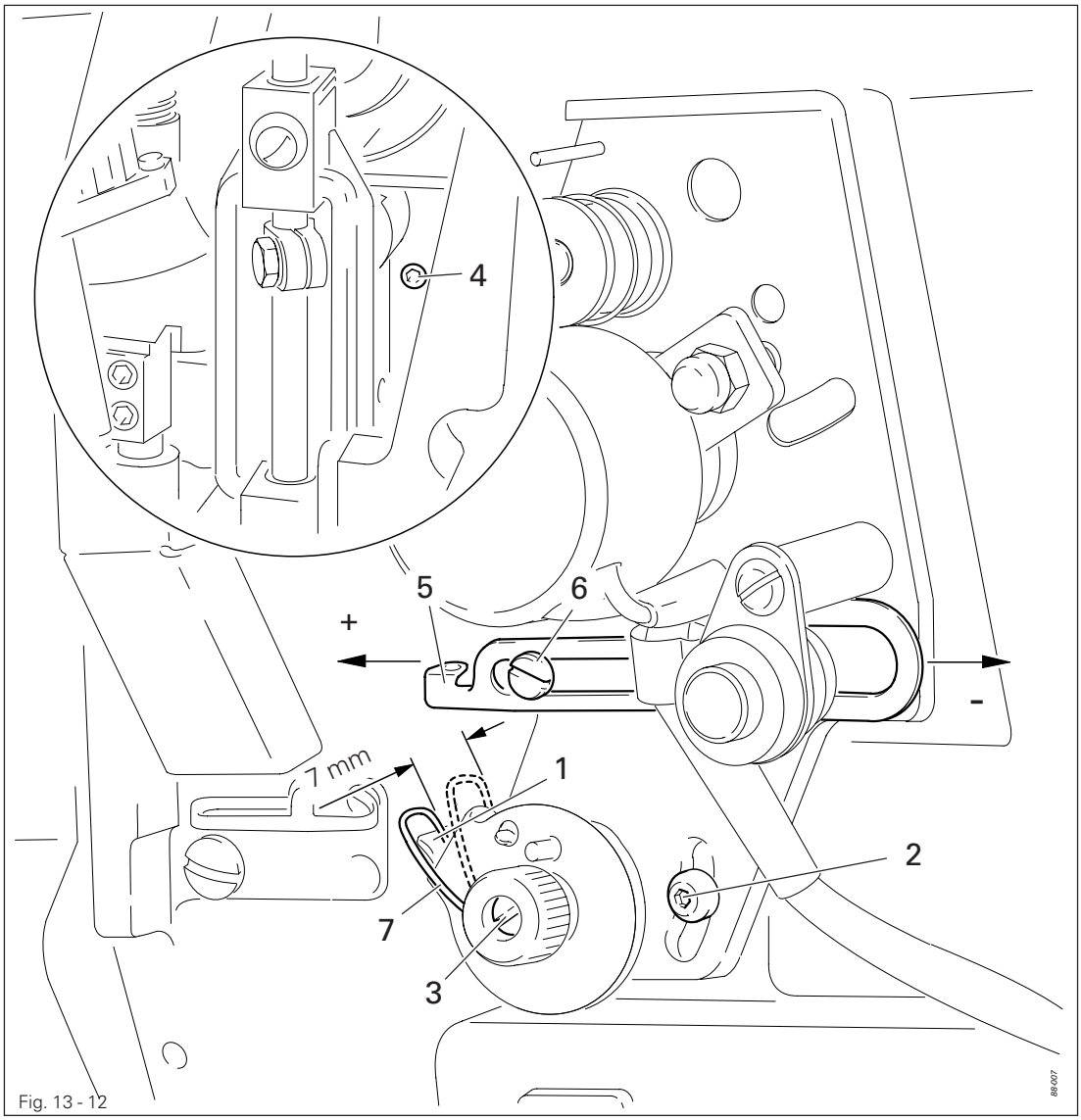

Fig. 13 - 12

- Move workpiece rack **1** (screw **2**) in accordance with **requirement 1**.
- Turn screw **3** (screw **4**) to adjust the tension of the spring.
- Move the slack thread regulator **5** (screw **6**) in accordance with **requirement 2**.

Due to technical sewing reasons it may be necessary to deviate from the spring stroke / spring tension described above.
Adjust the slack thread regulator **5** (screw **6**) in the direction of the " **+** " (= more thread) or the " - " (= less thread).

13.04.14 Bobbin winder

Requirements

1. With the bobbin winder on, the bobbin winder spindle must engage reliably. With the bobbin winder off, the friction wheel **5** must not engage the drive wheel **1**.
2. The bobbin winder must turn off automatically when the thread level is approx. **1 mm** from the edge of the bobbin.

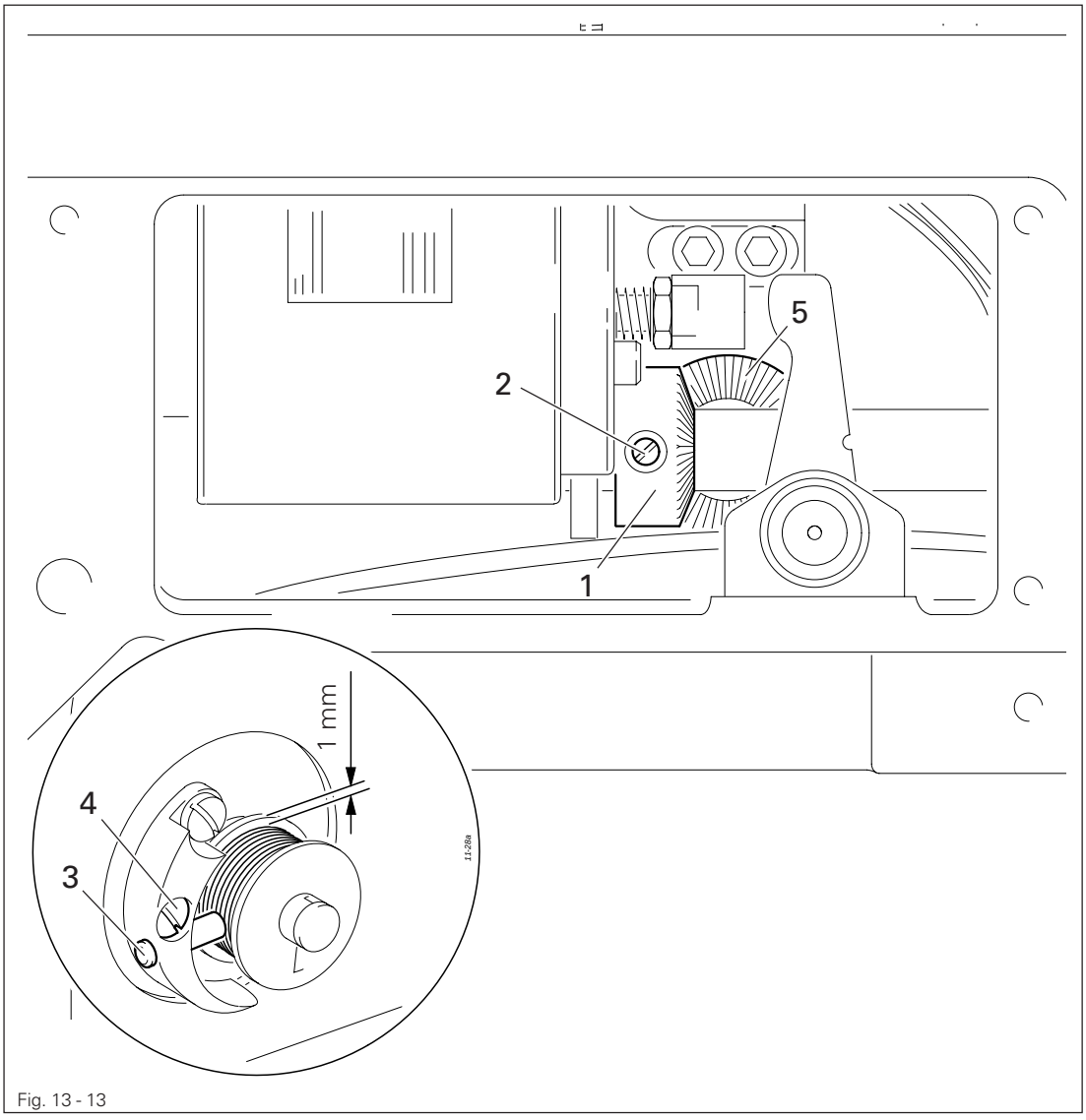

Fig. 13 - 13

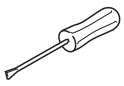

- Move drive wheel **1** (screws **2**) in accordance with **requirement 1**.
- Move pin **3** (screw **4**) in accordance with **requirement 2**.

13.04.15 Roller presser pressure

Requirement
The material should be fed without difficulty. No pressure marks should be visible on the material.

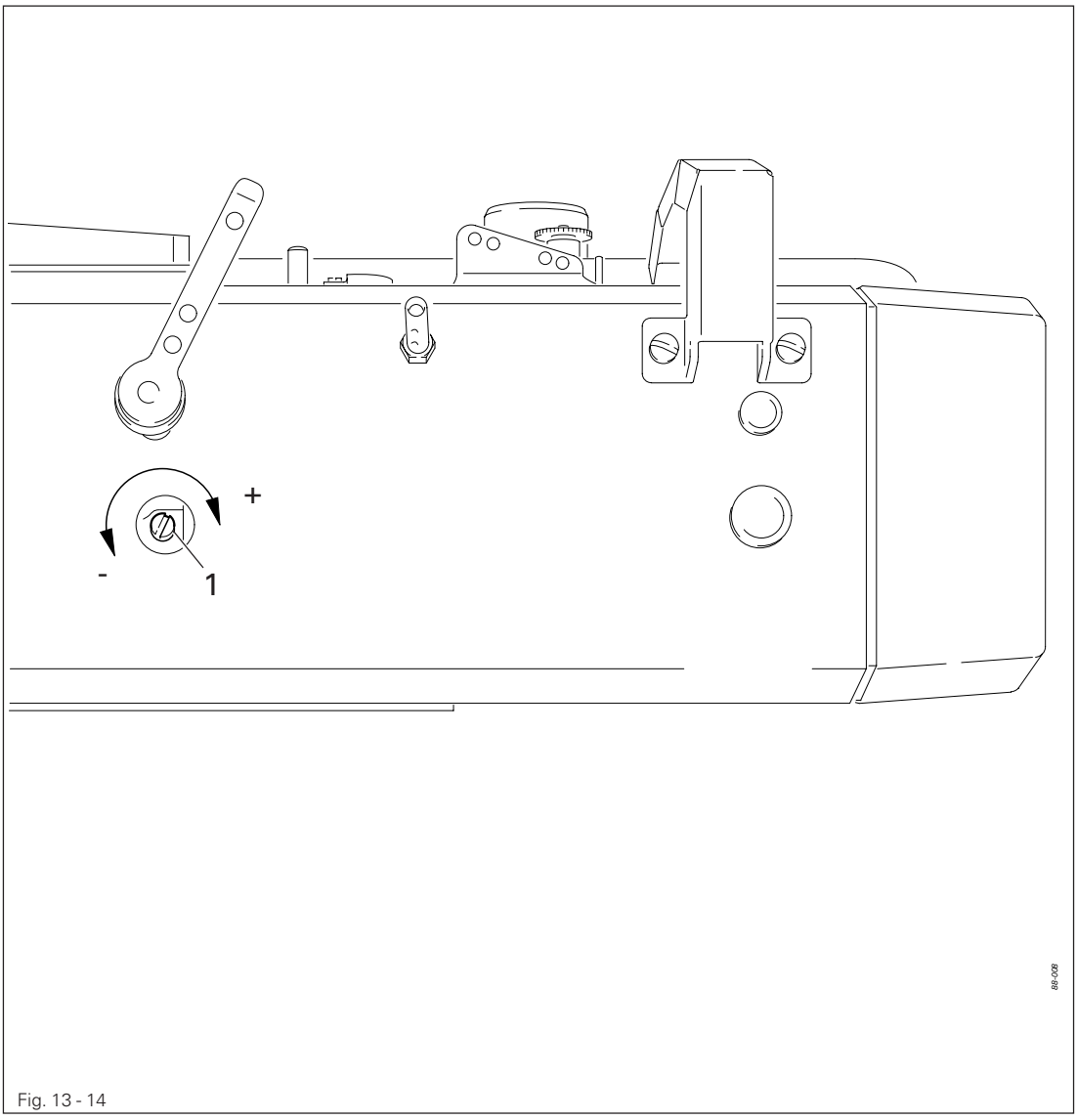

Fig. 13 - 14

- Adjust screw **1** (under a cover) in accordance with the **requirement.**

If the roller presser pressure is low enough, the lowering speed of the roller presser can be increased with parameter "**202**".

The maximum pressure is 25 N.

13.04.16 Locking the set value transmitter

Requirement
The pedal for selecting the fullness (left pedal) should be held securely in every position without being too stiff.

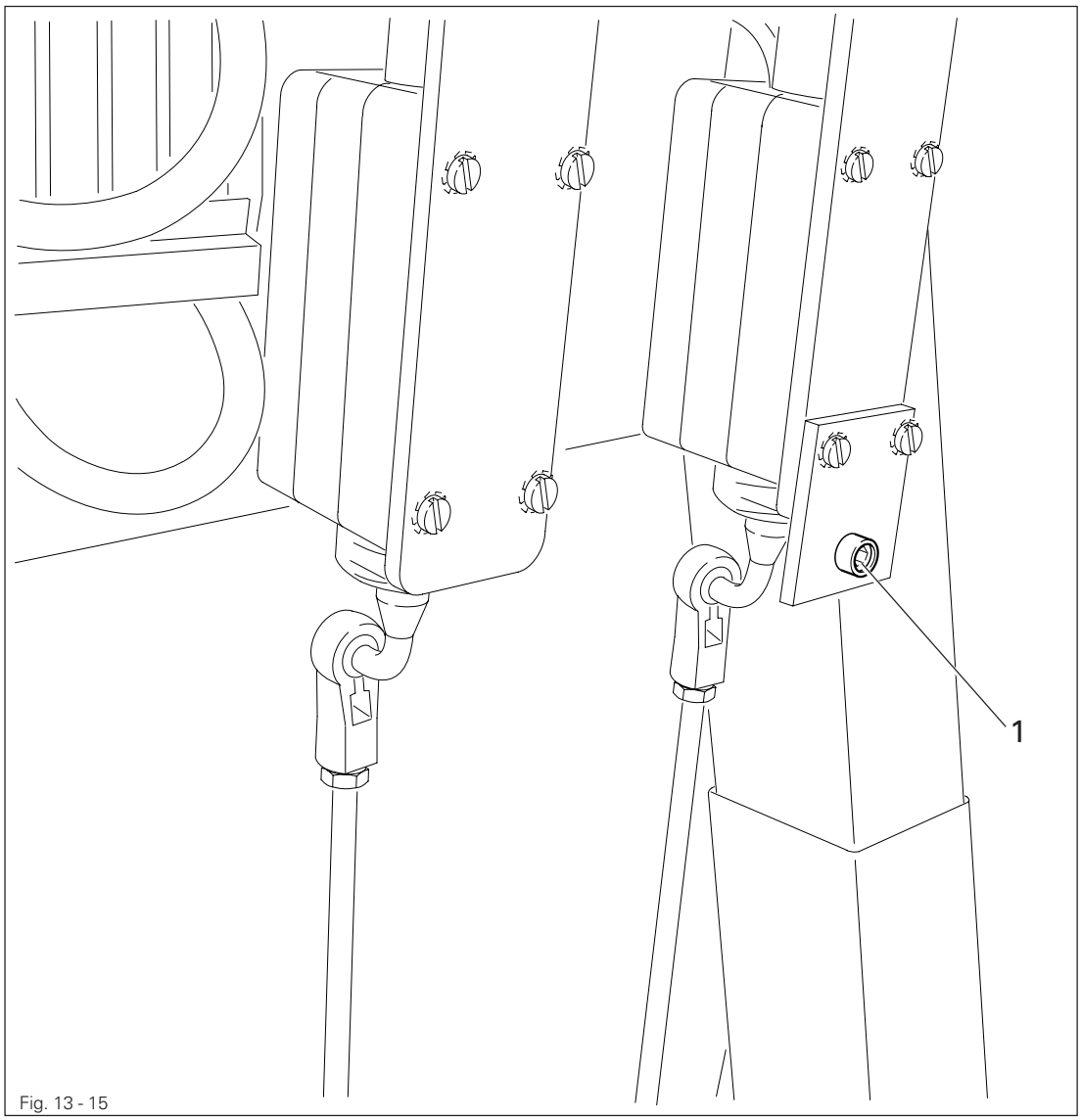

Fig. 13 - 15

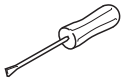

- Adjust screw **1** in accordance with the **requirement.**

13.04.17 Lubrication

Requirement
After a running time of 10 seconds a fine line of oil should form on a strip of paper held next to the hook.

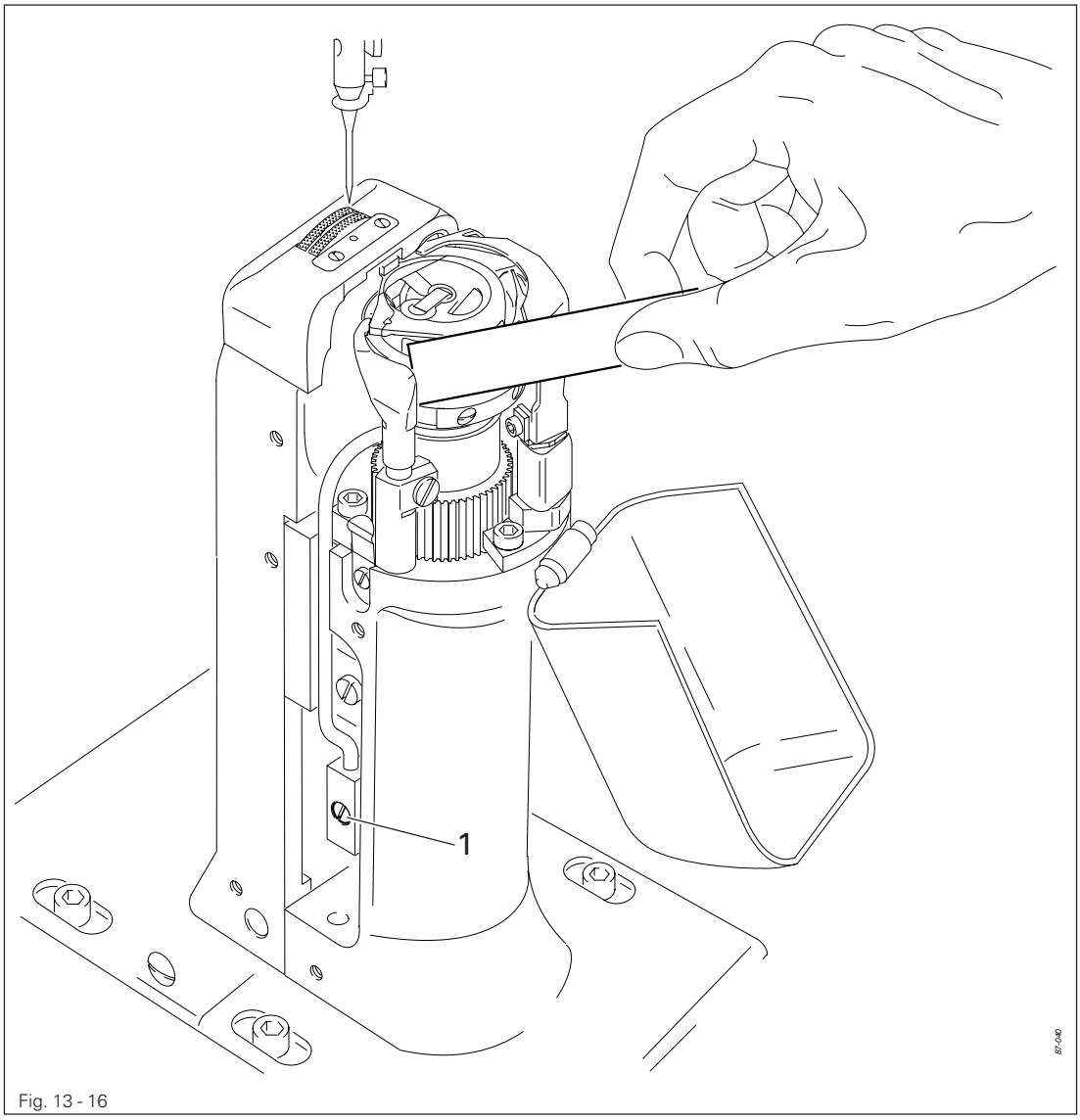

Fig. 13 - 16

- Check whether oil has been filled in and that there is no air in the oil lines.
- Let the machine run for **2-3 min.**.

While the machine is running do not place hands in the needle or hook area!
Danger of injury from moving parts!

- With the machine running hold a strip of paper on the hook and check the **requirement.**
- If necessary, adjust the oil flow on screw **1**.

13.04.18 Re-engage safety coupling

The coupling **1** is set by the manufacturer. When the thread jams, the coupling **1** disengages in order to avoid damage to the hooks.
A description of how to engage the coupling follows.

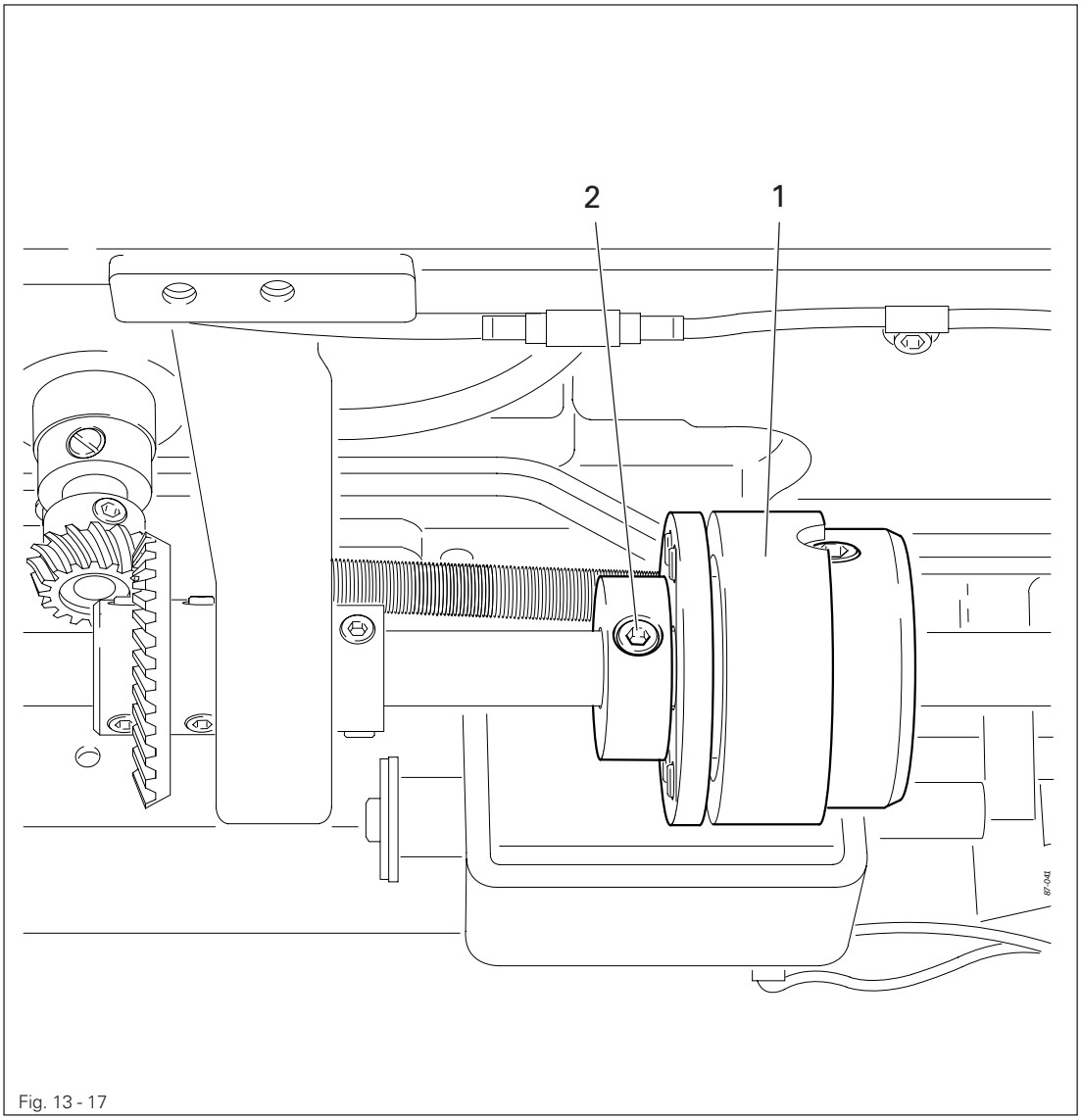

Fig. 13 - 17

- Remove jammed thread.
- Hold coupling **1** with screw **2** and turn the balance wheel, until you feel coupling **1** snap back into place again.

13.05 Adjusting the thread trimmer -900/81

13.05.01 Resting position of the roller lever / radial position of the control cam

Requirement

1. When the thread trimmer is in is resting position, lever **5** should be touching piston **6** and the roller of roller lever **7** should be **0.3 mm** away from control cam **3**.
2. When the take-up lever is at t.d.c., control cam **3** should just have placed roller lever **7** in its resting position.

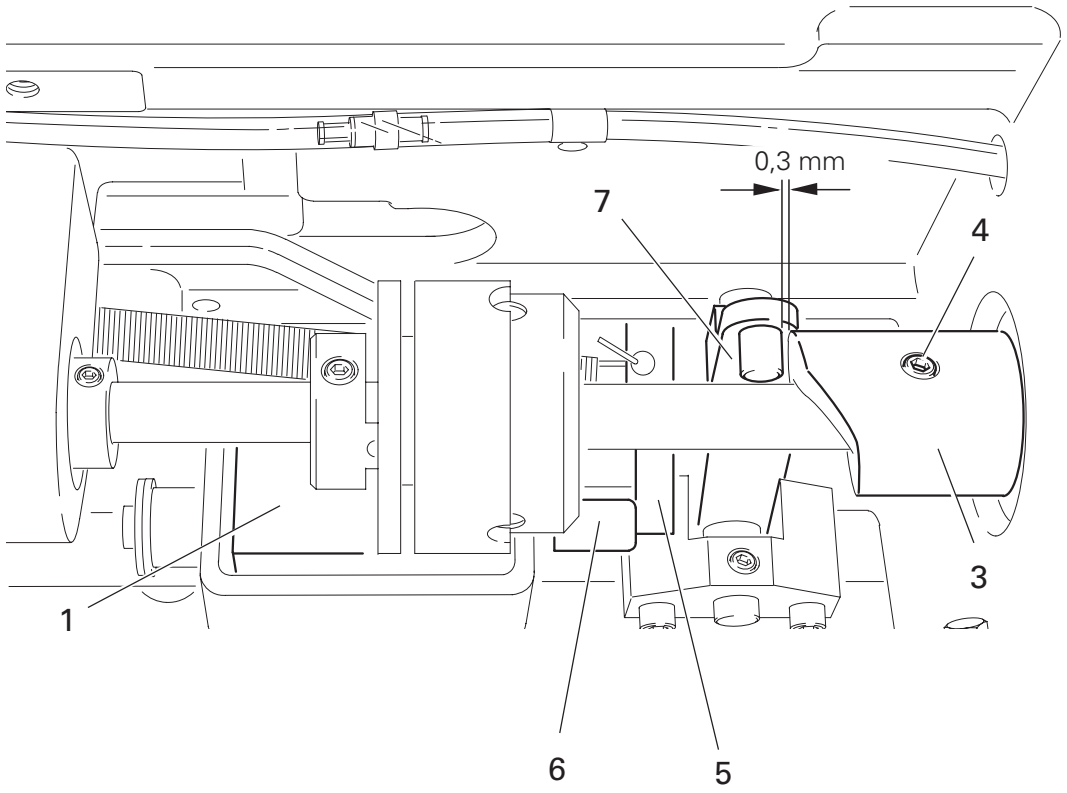

Fig. 13 - 18

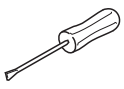

- Having made sure that piston **6** is positioned against the left stop, adjust magnet **1** (2 screws) in accordance with **requirement 1**.
- Adjust control cam **3** (screws **4**) in accordance with **requirement 2**.

13.05.02 Position of the thread catcher holder

Requirement

1. There should be a minimum amount of play between toothed wheel **3** and toothed segment **4**.
2. Both in the neutral position and the foremost position of the catcher, the distance between the toothed segment **4** and the outer edge of the thread catcher holder **1** should be the same (see arrow).

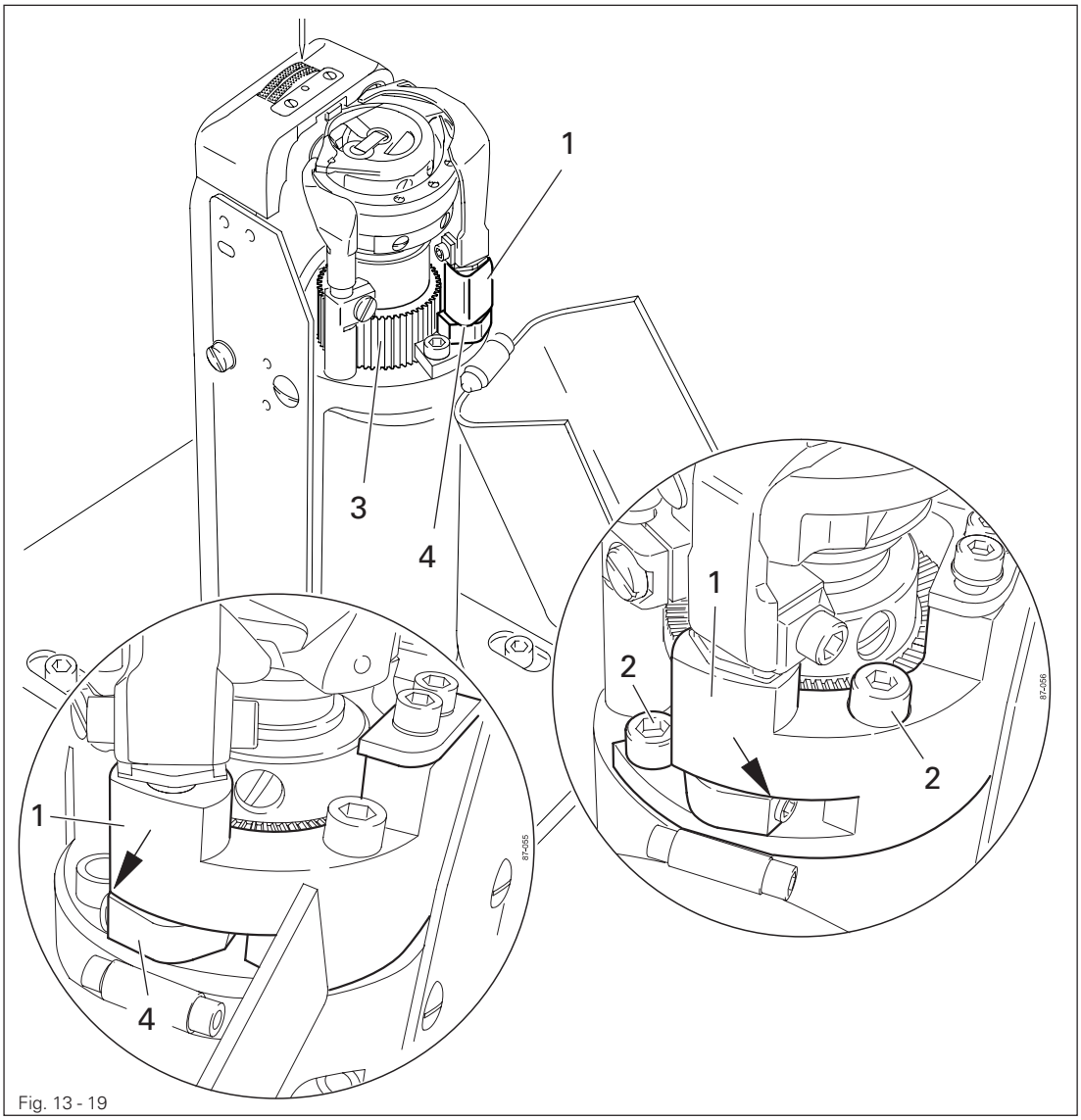

Fig. 13 - 19

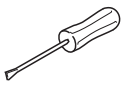

- Adjust the thread catcher holder **1** (screws **2**) according to the **requirements.**

If requirement 2 cannot be fulfilled, loosen screw **2** and move the toothed segment **4** by one tooth.

13.05.03 Distance between thread catcher and needle plate

Requirement
During its swivel movement thread catcher **1** should not pass the edge of the needle plate (see arrow).

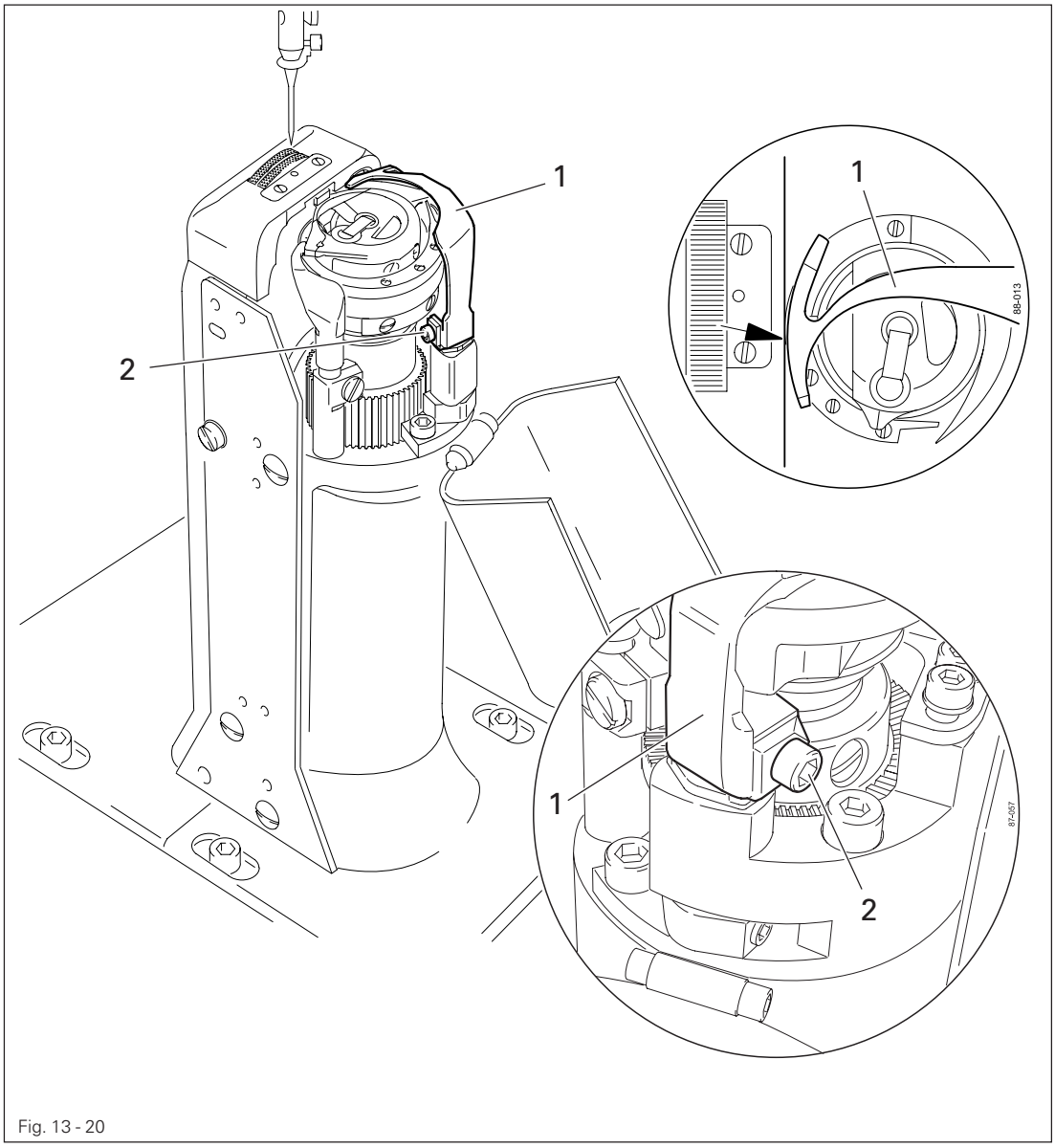

Fig. 13 - 20

- Move thread catcher **1** (screws **2, two screws**) parallel to the thread catcher holder in accordance with the **requirement**.

13.05.04 Position of the thread catcher

Requirement

1. The bottom edge of the thread catcher **1** should be at a distance of **0.1 mm** from the positioning finger of the bobbin case **5**.
2. When the thread trimmer is in its neutral position, the rear edge of thread catcher should be positioned **approx. 2.5 - 3 mm** behind the edge of the knife.

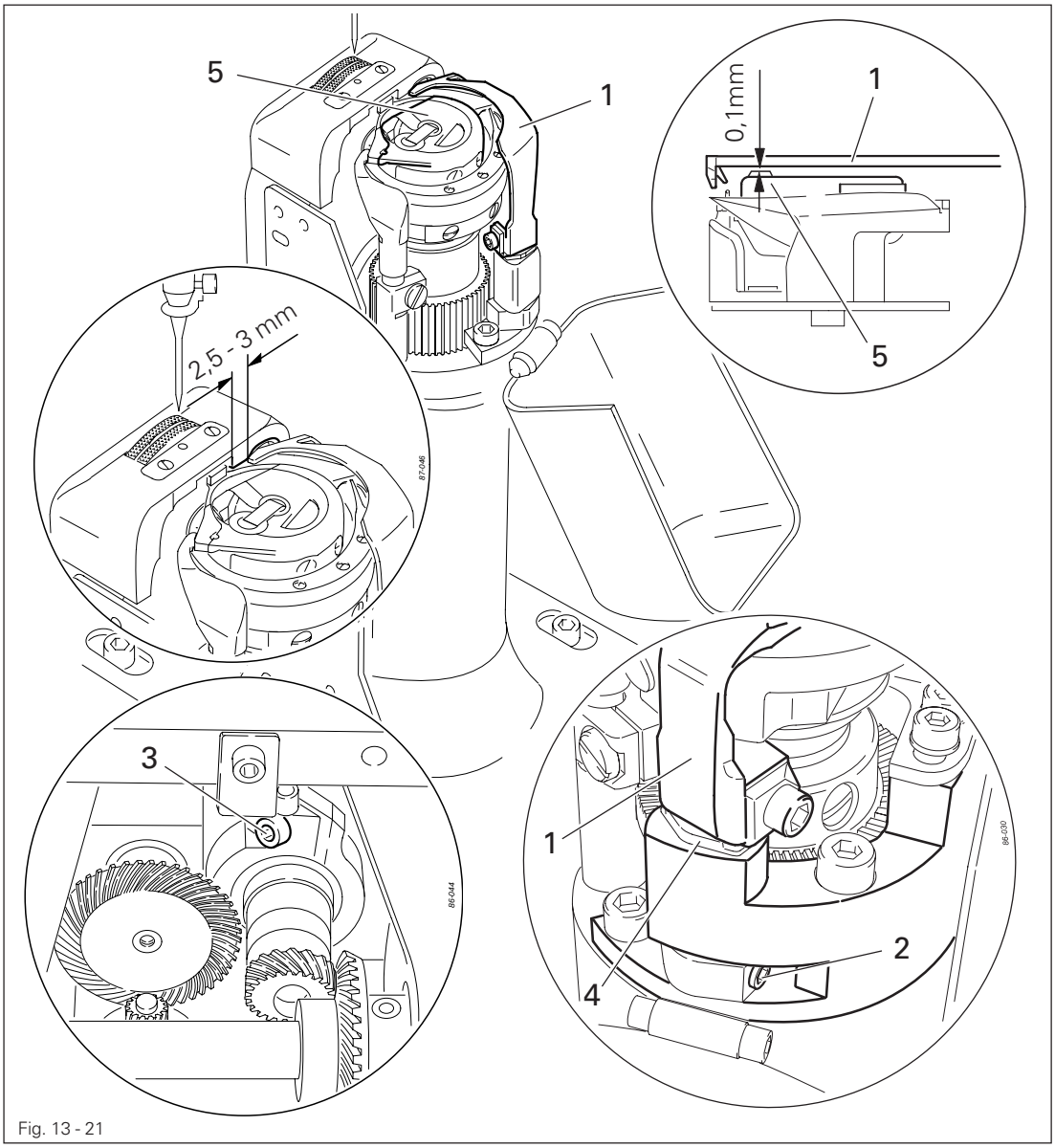

Fig. 13 - 21

- Move thread catcher **1** (screws **2**, **two screws**) in accordance with **requirement 1**.
- Turn thread catcher **1** (screw **3**) in accordance with **requirement 2**.

Thread catcher **1** must be parallel to the surface of the thread catcher holder **4**.

13.05.05 Knife position and knife pressure

Requirement

1. The knife **1** should be touching the needle plate.
2. The knife pressure should be set as low as possible but the cutting operation should still be carried out reliably.

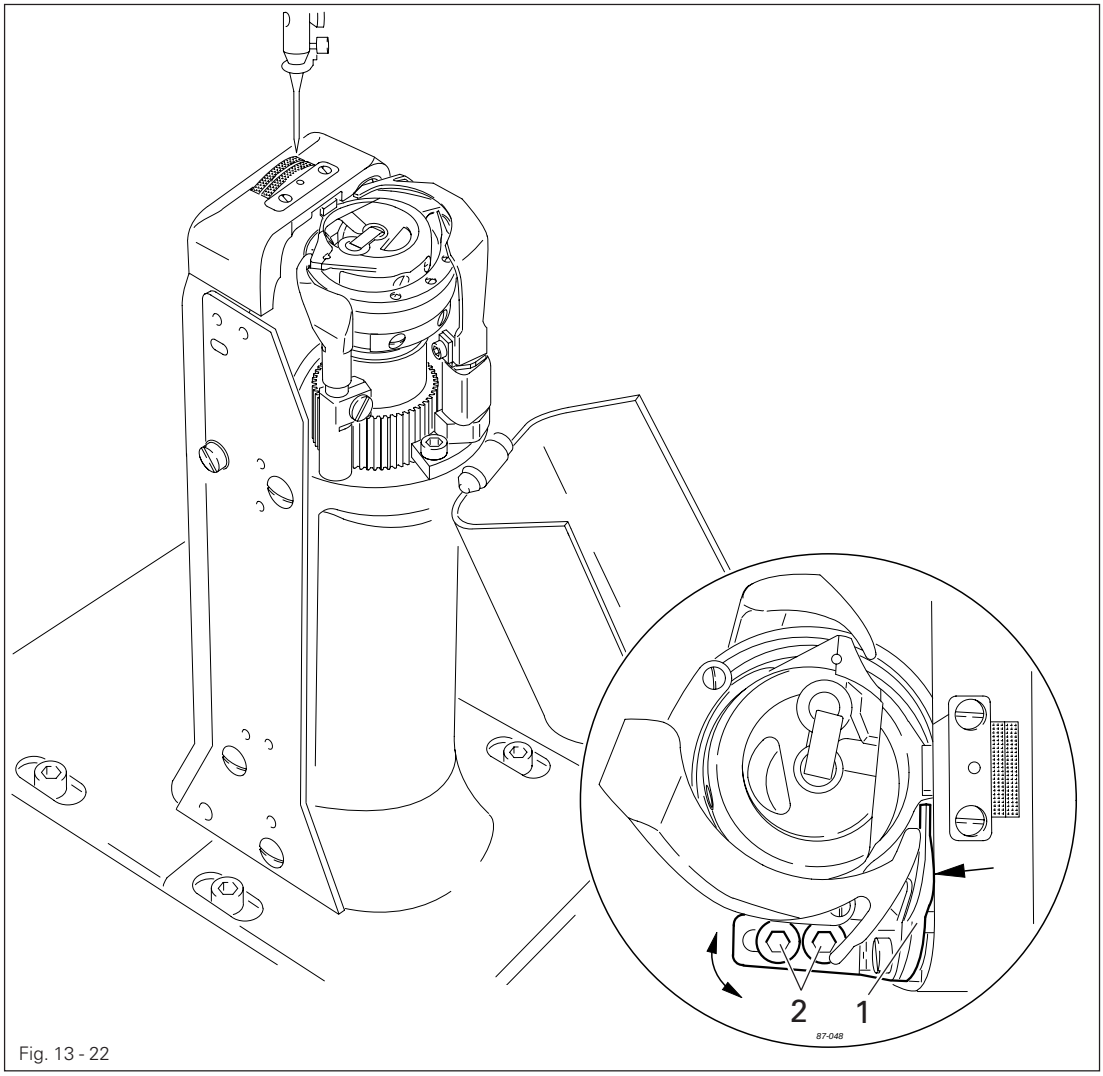

Fig. 13 - 22

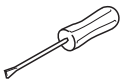

- Move knife **1** (screws **2**) in accordance with **requirement 1** or swivel it in accordance with **requirement 2**.

13.05.06 Bobbin thread retaining spring

Requirement

1. The bobbin thread clamp spring should be guided reliably in the thread groove of the thread catcher **3**.
2. The tension of the bobbin thread spring clamp should be as low as possible, but the bobbin thread should be held reliably after the cutting operation.

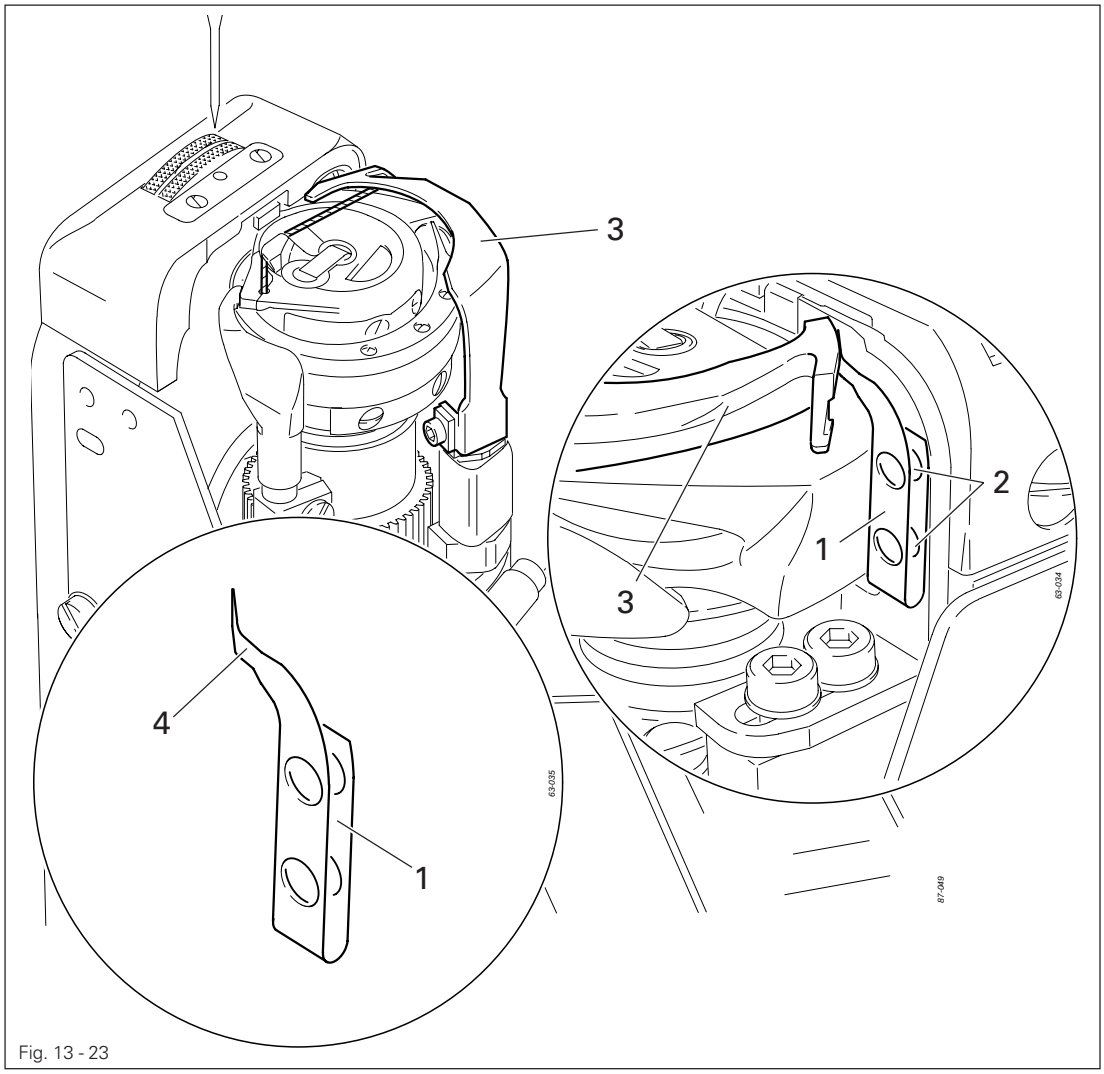

Fig. 13 - 23

- Adjust bobbin thread clamp spring **1** (screws **2**) in accordance with **requirement 1**.
- Adjust the tension in accordance with **requirement 2** by bending side **4** of the bobbin thread clamp spring **1**.

Control - requirement 1

- Switch off the machine and bring the take-up lever to its b.d.c.
- Engage and disengage the thread catcher **3** by hand and check **requirement 1**. Adjust if necessary.

Control - requirement 2

- After the thread has been cut, sew a few stitches by turning the balance wheel, checking whether the bobbin thread is drawn out of the bobbin thread clamp spring between the 1st and 3rd stitches. If necessary, correct the tension.

13.05.07 Manual cutting test

Requirement

1. When thread catcher **1** is on its forward stroke, it must not carry bobbin thread **3** forward too.
2. When thread catcher **1** is in its front position, bobbin thread **3** must be held reliably by hook **4.**
3. After the trimming action, both the needle thread and the bobbin thread must be perfectly cut and bobbin thread **3** retained.

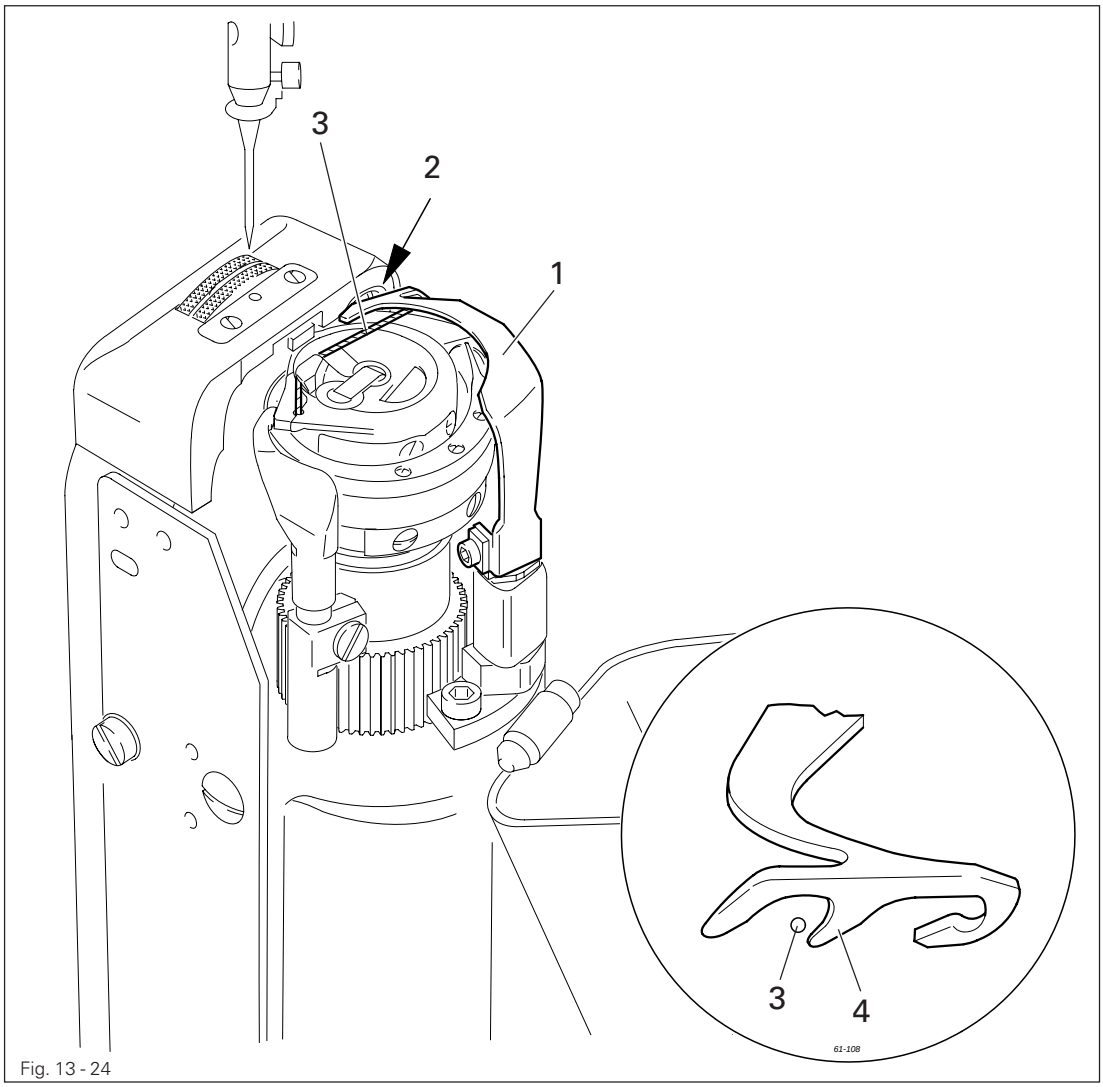

Fig. 13 - 24

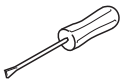

- Sew a few stitches.
- Turn off the on/off switch.
- Carry out the cutting operation manually.
- Check **requirement 1** and **2**, and if necessary readjust thread catcher **1** in accordance with **Chapter 13.05.04 Position of the thread catcher.**
- Check **requirement 3**, and if necessary readjust the bobbin thread retaining spring **2** in accordance with **Chapter 13.05.06 Bobbin thread retaining spring**.

13.06 Parameter settings

13.06.01 Overview of the parameter functions

After the machine has been switched on, by pressing the appropriate function the input mode is called up, in which the individual parameters can be called up directly. With a code it is possible to protect all or individual parameter groups against unauthorised access.

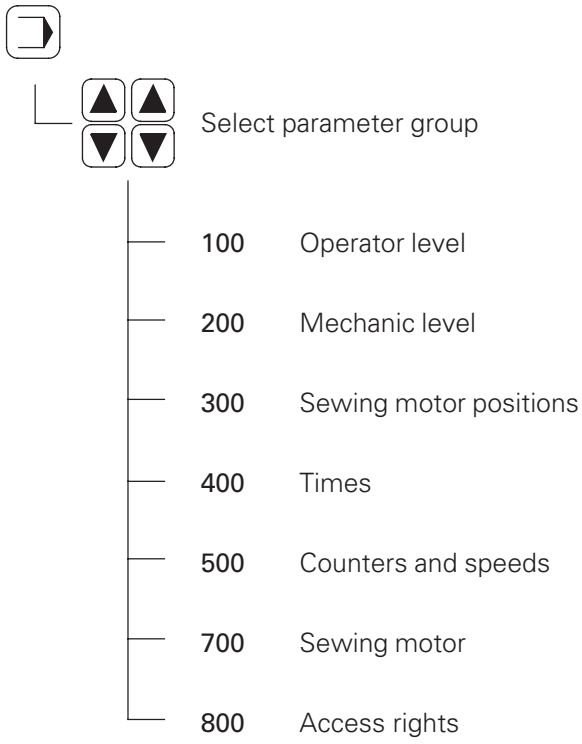

13.06.02 Example of a parameter input

- Switch on the machine.

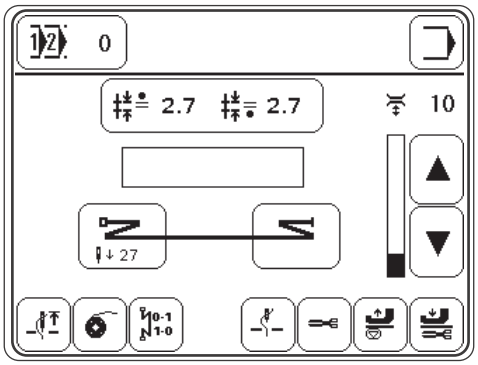

- Call up the input mode.

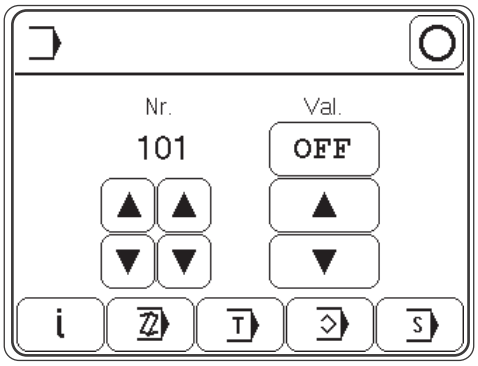

- Select, e.g. parameter "104" (bobbin thread monitoring).

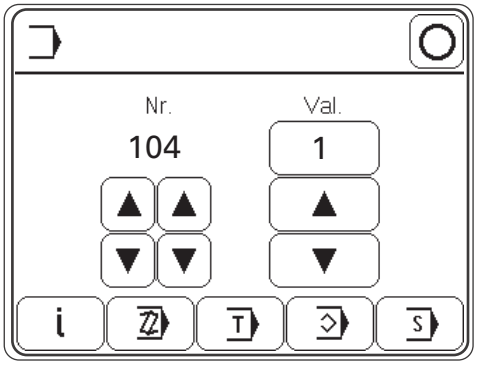

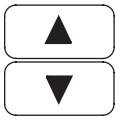

- Switch off e.g. bobbin thread monitoring (value "0").

- Conclude input.

13.06.03 List of parameters

The operator has free access to the "100" parameters. Parameters "200" – "800" can only be changed after entering a code number and many only be changed by authorised personnel.

Group	Parameter	Description	Setting range	Set value
1	101	Start backtack, pedal-controlled (OFF = AUS, ON = EIN)		OFF
	102	Reversing (OFF = AUS, ON = EIN)		OFF
	103	Stitch placement (OFF = AUS, ON = EIN)		OFF
	104	Bobbin thread monitoring (0 = OFF, 1 = reverse counter, 2 = thread monitor)	0 - 2	0
	105	Bobbin thread reverse counter	0 -99999	12000
	106	Remaining bobbin thread counter	0 -999	100
	107	Maximum stitch length of fullness pedal [mm]	0.8 - 6.5	4.0
	108	Display software version of main processor	0329/....	
	110	Display software version of the control panel	V...H...	
	111	Software version of the sewing drive	V35	
	112	Key tone of the control panel OFF = Aus, ON = Ein		ON
	113	Beep tone for section change OFF = Aus, ON = Ein		ON
	114	Display software version of the thread strength module	V..	
2	201	Knee switch for section change (in the seam programs 3-49) OFF = Aus, ON = Ein		OFF
	202	Lowering speed roller presser OFF = quick, ON = slow		ON
	203	Puller OFF / ON		OFF
3	301	Position take-up lever t.d.c.	0 - 127	2

Group	Parameter	Description	Setting range	Set value
3	302	Position needle lowered	0 - 127	20
	303	Position cutting solenoid "on"	0 - 127	20
	304	Position cutting solenoid "tacting"	0 - 127	103
	305	Position cutting solenoid "off"	0 - 127	123
	306	Reverse position	0 - 127	103
	307	Placement stitch position	0 - 127	7
	308	Position thread tension release	0 - 127	101
4	401	Delay time lifting roller presser [s]	0.01 - 1.50	0.02
	402	Start delay after lowering roller presser [s]	0.01 - 1.50	0.15
	403	Set lift roller presser [s]	0.01 - 0.20	0.03
	404	Tact thread cutting solenoid [%]	10 - 50	35
	405	Time for cleaning thread monitor [s]	0.01 - 1.50	0.25
5	501	Maximum speed	100 - 3500	3500
	502	Speed start backtack	100 - 1500	700
	503	Speed end backtack	100 - 1500	700
	504	Speed soft start	100 - 3500	1500
	505	Soft start stitches	0 - 15	0
7	701	P-quota speed controller	1 - 50	30
	702	I-quota speed controller	0 - 100	50
	703	P-quota position controller	1 - 50	20
	704	D-quota position controller	1 - 100	30
	705	Time for position controller	0 - 100	25
	706	P-quota position controller for rest brake	1 - 50	25
	707	D-quota position controller for rest brake	1 - 50	15
	708	Maximum moment for rest brake	0 - 100	0
	709	Minimum machine speed	3 - 64	6
	710	Maximum machine speed	1 - 35	35

Group	Parameter	Description	Setting range	Set value
7	711	Maximum motor speed	1 - 35	35
	712	Positioning speed	3 - 25	18
	713	Acceleration ramp	1 - 50	35
	714	Brake ramp	1 - 50	30
	715	Reference position	0 - 127	20
	716	Time-out	0 - 255	40
	717	Starting current motor	3 - 10	8
	718	Anti-vibration filter	1 - 10	6
	719	Rotation direction allocation	0 - 1	0
	720	Reference position correction	0 - 127	64
8	801	Right of access function group 100	0 - 1	0
	802	Right of access function group 200	0 - 1	1
	803	Right of access function group 300	0 - 1	1
	804	Right of access function group 400	0 - 1	1
	805	Right of access function group 500	0 - 1	1
	806	Right of access service	0 - 1	1
	807	Right of access function group 700	0 - 1	1
	808	Right of access function group 800	0 - 1	1
	809	Right of access program creation	0 - 1	1
	810	Enter access code	0 - 9999	1500

13.07 Explanation of the error messages

Message	Description
E001	System error
E002:	Sewing motor
E003:	Section
E004:	End of section
E005:	Pedal activated when machine switched on
E006:	Communication error with stepping motor processor
E007:	End of ramp
E008:	End position of needle drive not found
E009:	Centre position of needle drive not found
E010:	Error of stepping motor processor
E011:	Stepping motor stepping frequency too high
E012:	Error in sewing start deflection
E013:	Error in docu-seam system
E014:	Incorrect program number (larger than 99)
E015:	Incorrect section number
E016:	Memory full
E017:	Incorrect stitch length
E019:	Interface to external controller
E021:	Power supply unit overloaded
E022:	Mains voltage
E023:	Power supply 24V too high/too low
E024:	Error at CAN interface

13.08 Warning messages

Message	Description
WARNING 2	Bobbin thread error

13.09 Carry out a cold start

- Switch on the machine.

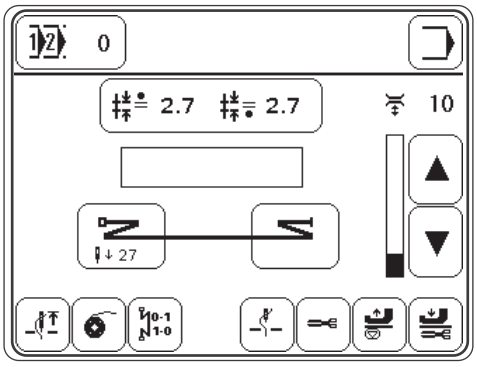

- Call up the input mode.

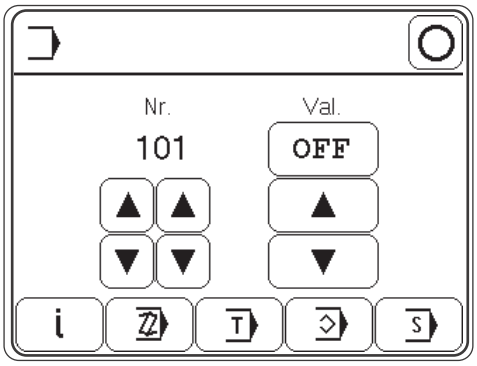

- Call up the service menu.

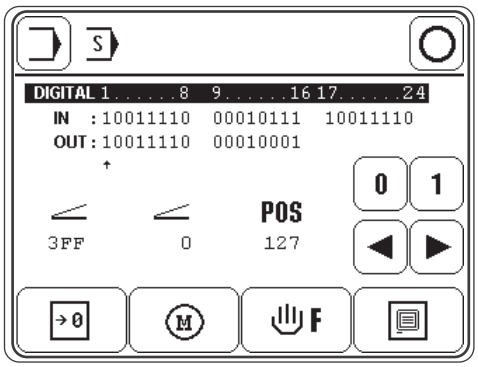

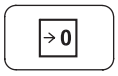

- Carry out a cold start.

After a cold start all programmed values are set back to their status at the time of delivery.
The puller can be reactivated under parameter 203.

13.10 Internet update of the machine software

The machine software can be updated with PFAFF flash programming. For this purpose the PFP boot program and the appropriate control software for the machine type must be installed on a PC. To transfer the data to the machine, the PC and the machine control unit must be connected with an appropriate null modem cable (part no. 91-291 998-91).

The PFP boot program and the control software of the machine type can be downloaded from the PFAFF-homepage using the following path:
www.pfaff-industrial.de/pfaff/de/service/downloads

To update the machine software carry out the following steps:

While the machine software is being updated, no setting up, maintenance or adjustment work may be carried out on the machine!

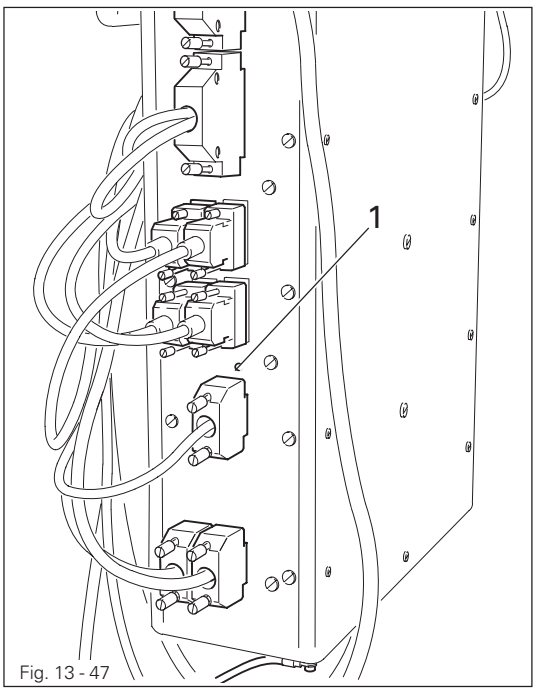

Fig. 13 - 47

- Switch off the machine.
- Connect the PC (serial interface or appropriate USB-adapter) and the machine control unit (RS232). To do so disconnect the plug of the control panel.
- Switch on the PC and start the PFP boot program.
- Select the machine type.
- Press the "programming" button.
- Hold down boot key **1** and switch on the machine.
- Press the "OK" button.

- The software update is carried out, the update progress is shown on the bar display of thePFP boot program.
- During the up-dating procedure the machine must not be switched off.
- When the update has been completed, switch off the machine and end the PFP boot program.
- End the connection between the PC and the machine control unit and reconnect the control panel to the machine control unit.
- Switch on the machine.
  A plausibility control is carried out and, if necessary, a cold start.

More information and assistance is at your disposal in the file "PFPHILFE.TXT", which can be called up from the PFP boot program by pressing the "help" button.

13.11 Service menu

In the service menu information is displayed about the machine's inputs and outputs, as well as the values for both pedals and the balance wheel position.
In addition the following functions can also be carried out.

- Switch on the machine.

- Call up the input mode.

- Call up the service menu.

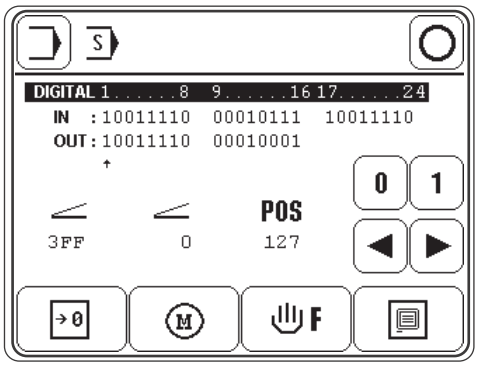

Explanation of the functions

Input mode
Quit the service menu and call up the input mode.

Sewing mode
Quit the service menu and call up the sewing mode.

Set/reset outputs
Use the arrow functions to select the desired output and set "function 1" or reset "function 2".

Cold start
See **Chapter 13.09 Carry out a cold start.**

Motors
After this function has been called up, the stepping motors for roller presser and feed wheel and for the sewing motor can be moved.

Balance wheel sequence
After selecting this function the stitch formation can be checked. The movement of the stepping motors for the stitch length depends on the position of the balance wheel.

Control panel
See **Chapter 9.13 Adjusting the control panel.**

14 Wearing parts

This is a list of the most important wearing parts.
A detailed parts list for the complete machine is included with the accessories. In case of loss, the parts list can be downloaded from the internet address **www.pfaff-industrial.com/pfaff/en/service/downloads** As an alternative to the internet download the parts lists can also be ordered in book form under part no. 296-12-18 935.

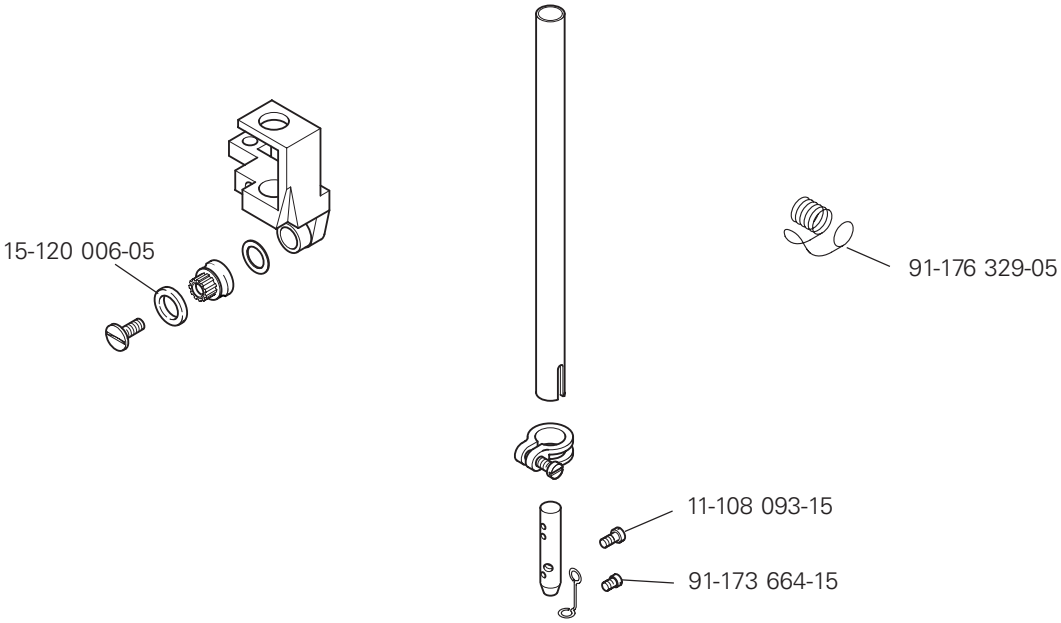

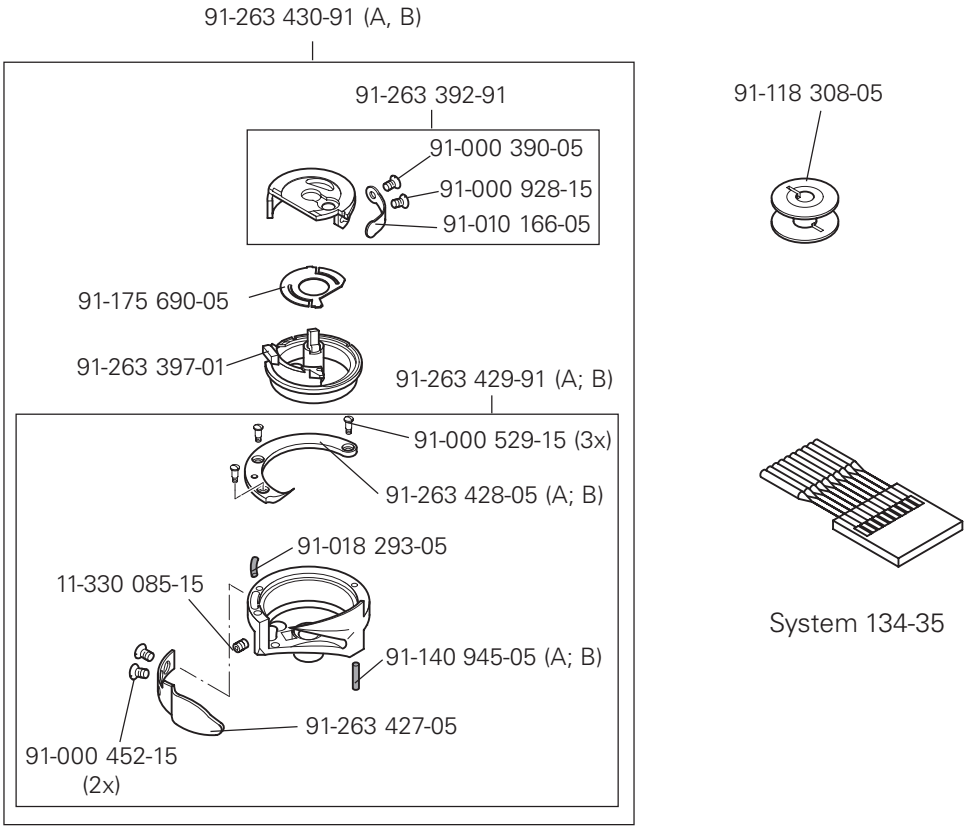

System 134-35

for subclass -900/81

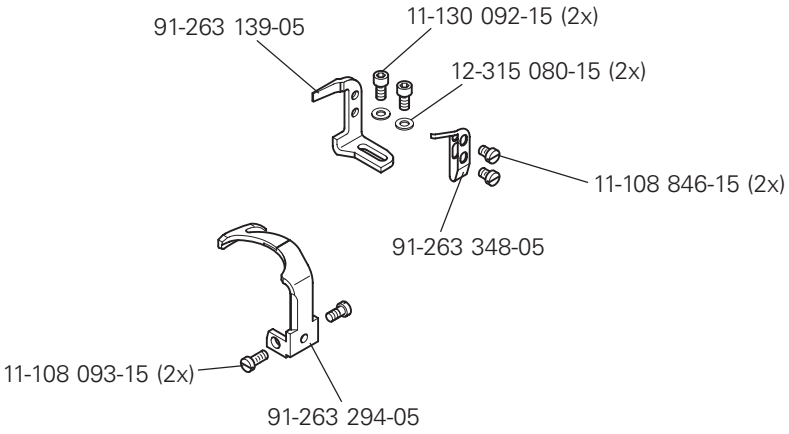

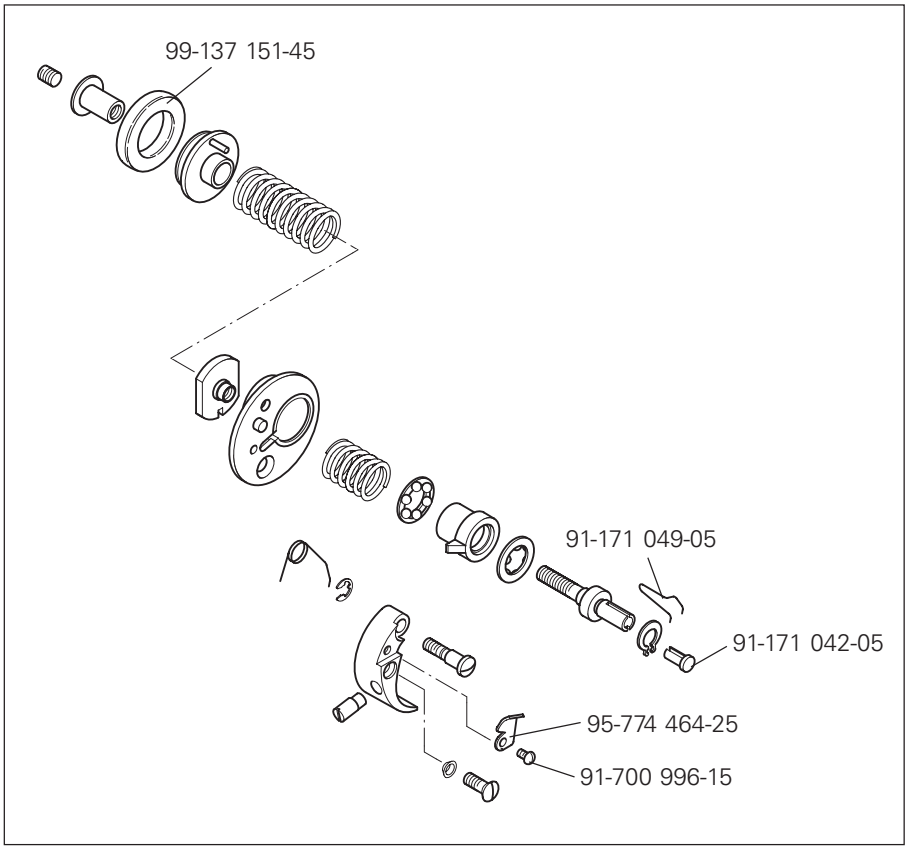

15 Circuit diagrams

Reference list for circuit diagrams

A1	Controller Quick P 320MS
A2	Control panel T1
A14	Sewing head identification
A100	Thread strength module
A101	Thread strength solenoid and key (release thread strength solenoid)
B10	Initiator material height
H1	Sewing lamp
H20	LED Stitch counter
M1	Sewing motor
M2	Stepping motor feed wheel
M3	Stepping motor roller presser
M45	Pullermotor
Q1	Main switch
R45	Resistance 330 ohm
S1	Pedal set value transmitter
S2	Pedal 2 Fullness
S21	Manual backtacking key
S22	Single stitch switch
S23	Needle position change switch
S24	Start inhibitor switch
S26	Knee switch (program)
S101	Key (release thread strength solenoid)
XP1	Pedal set value transmitter
XP2	Pedal Fullness
X1	Mains plug
X1A	RS232 – interface 1 Control panel T1
X1B	VSS Sewing head identification
X3	Incremental transmitter (sewing motor)
X4A	Stepping motor feed wheel
X4B	Stepping motor roller presser
X5	Inputs
X8	Sewing motor
X11A	CAN interface
X11B	Pedal set value transmitter and fullness
X13	Outputs
X15	Thread monitor
X20	Stepping motor feed wheel
X21	Stepping motor roller presser
X30	Initiator material height
X31	Key row
X34	Start inhibitor
X36	Knee switch (program)
X41	-910/.. Automatic presser foot lift
X42	-900/.. Thread trimmer
X45	R45 Resistor
X101	Power supply A100 and thread strength solenoid A101
X102	CAN interface
X103	RS232 interface
X110	Thread strength solenoid and key (release thread strength solenoid)
Y1	-910/.. Automatic presser foot lift
Y2	-900/..Thread trimmer
Y101	Thread strength solenoid

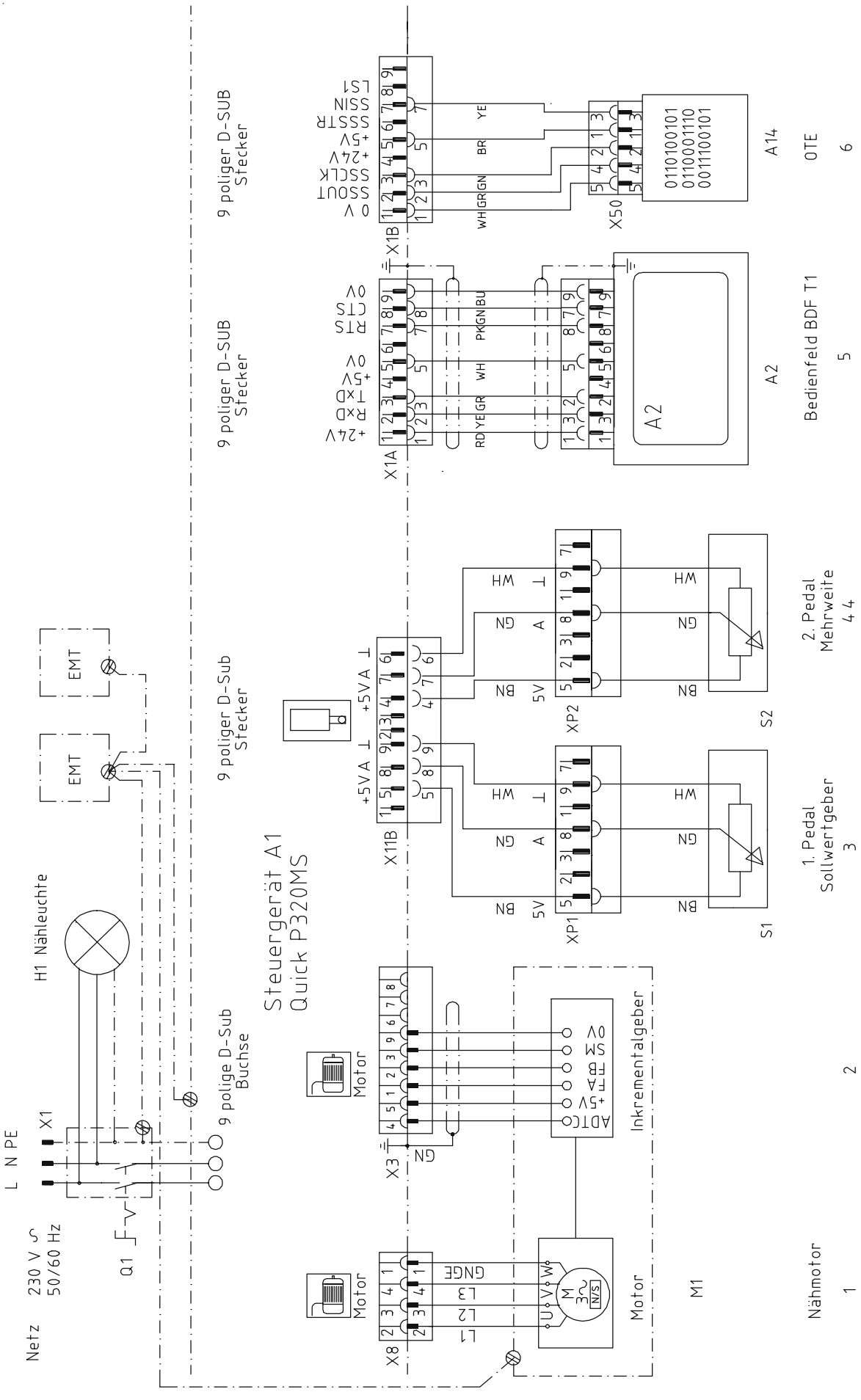
Netz 230 V ~ 50/60 Hz
L N PE
X1
Q1
H1 Nähleuchte
EMT
9 polige D-Sub Buchse
9 poliger D-Sub Stecker
Steuergerät A1
Quick P320MS
X3
X8
Motor
Inkrementalgeber
M1
Nähmotor
1
2
X11B
XP1
XP2
1. Pedal Sollwertgeber
3
2. Pedal Mehrweite
4 4
S1
S2
X1A
X1B
A2
Bedienfeld BDF T1
5
X50
A14
OTE
6

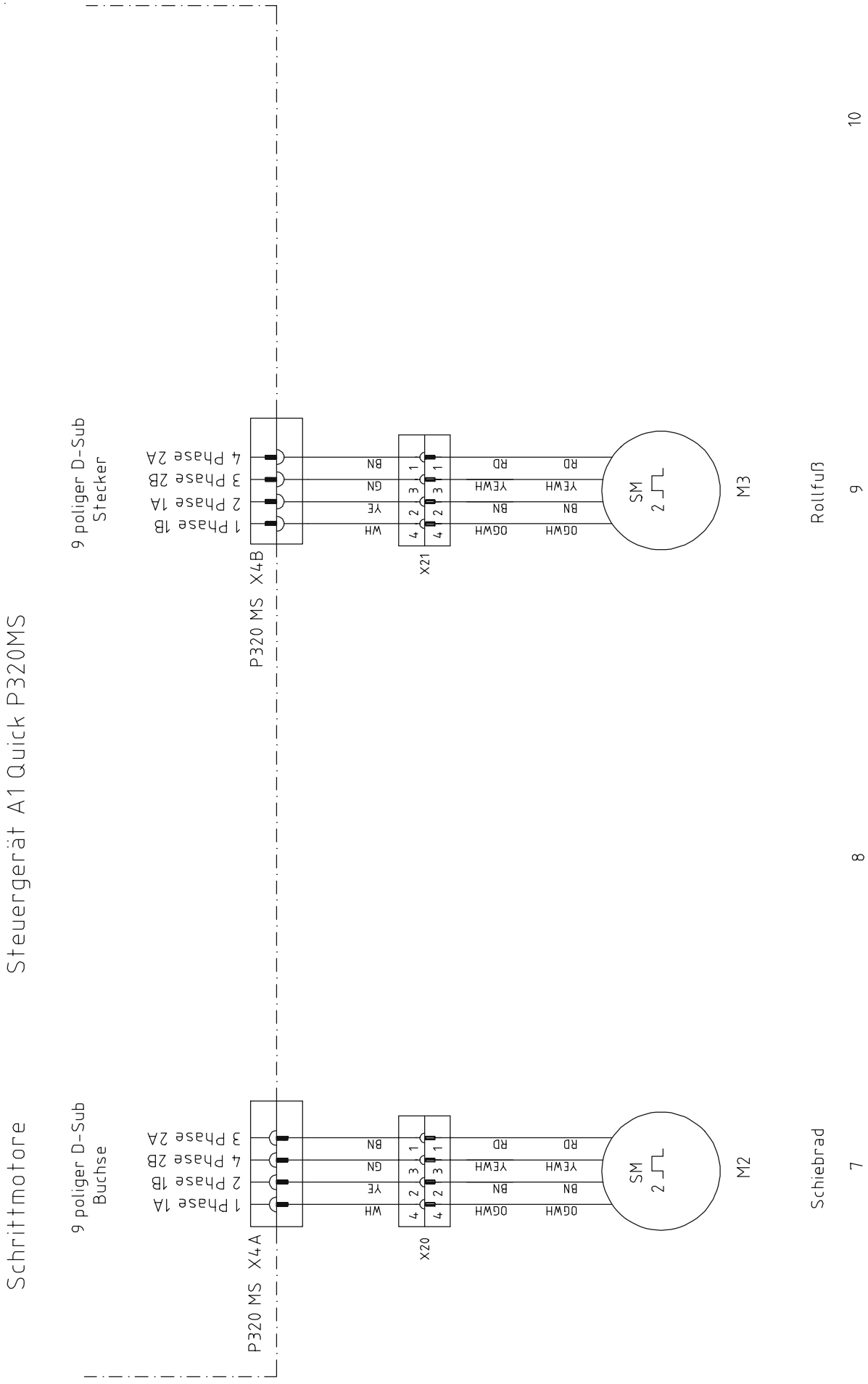
Steuergerät A1 Quick P320MS
Schrittmotore
9 poliger D-Sub
Buchse
1 Phase 1A
2 Phase 1B
3 Phase 2A
4 Phase 2B
P320 MS X4A
X20
WH
YE
GN
BN
OGWH
YEWH
RD
SM
M2
Schiebrad
7
8
9 poliger D-Sub
Stecker
1 Phase 1B
2 Phase 1A
3 Phase 2B
4 Phase 2A
P320 MS X4B
X21
M3
Rollfuß
9
10

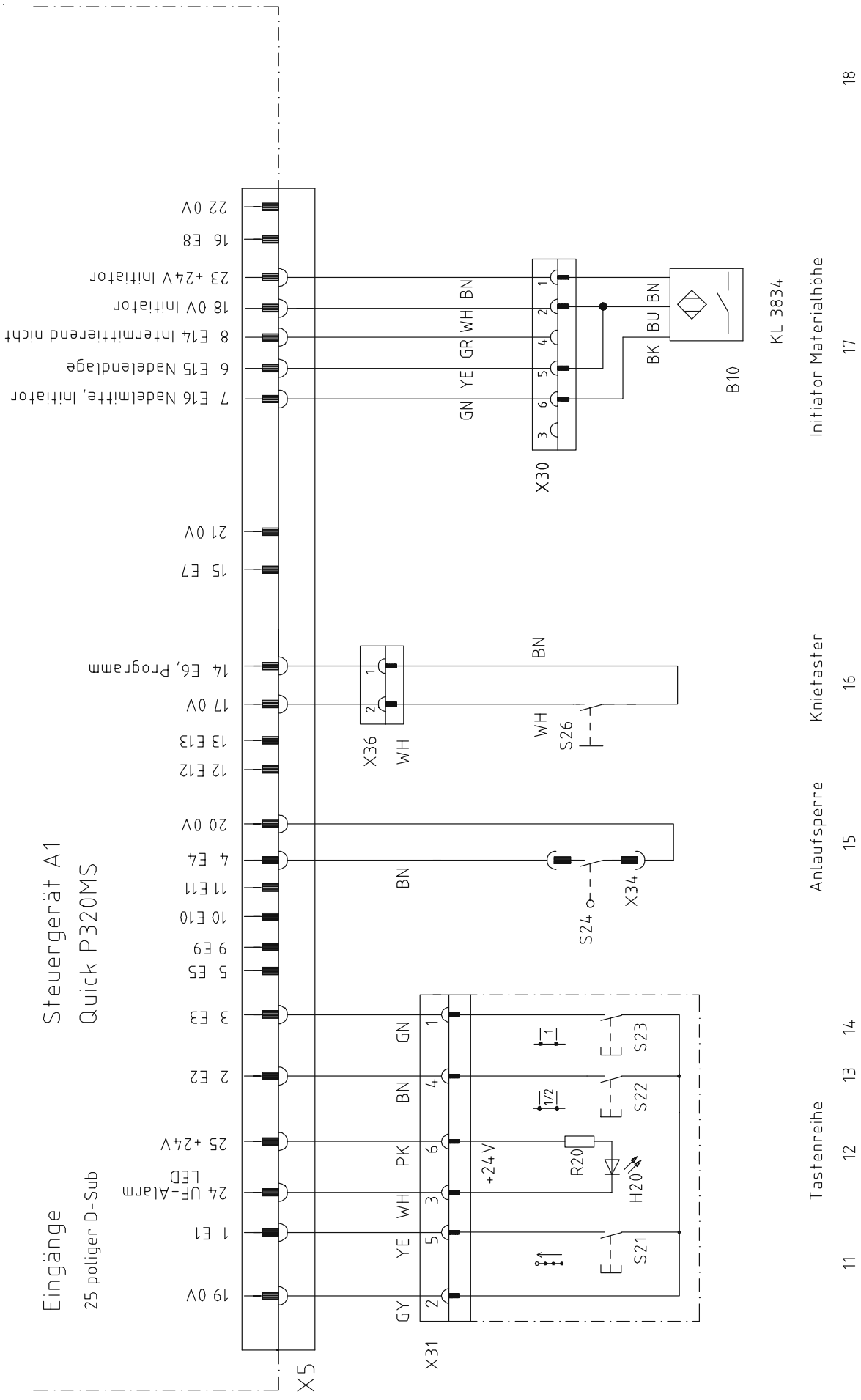
Steuergerät A1
Quick P320MS
Eingänge
25 poliger D-Sub
X5
19 0V
1 E1
24 UF-Alarm LED
25 +24V
2 E2
3 E3
5 E5
9 E9
10 E10
11 E11
4 E4
20 0V
12 E12
13 E13
17 0V
14 E6, Programm
15 E7
21 0V
7 E16 Nadelmitte, Initiator
6 E15 Nadelendlage
8 E14 Intermittierend nicht
18 0V Initiator
23 +24V Initiator
16 E8
22 0V
X31
GY
YE
WH
PK
BN
GN
+24 V
R20
H20
S21
S22
S23
Tastenreihe
S24
X34
Anlaufsperre
S26
X36
WH
BN
Knietaster
X30
GN YE GR WH BN
BK BU BN
B10
KL 3834
Initiator Materialhöhe
11
12
13
14
15
16
17
18

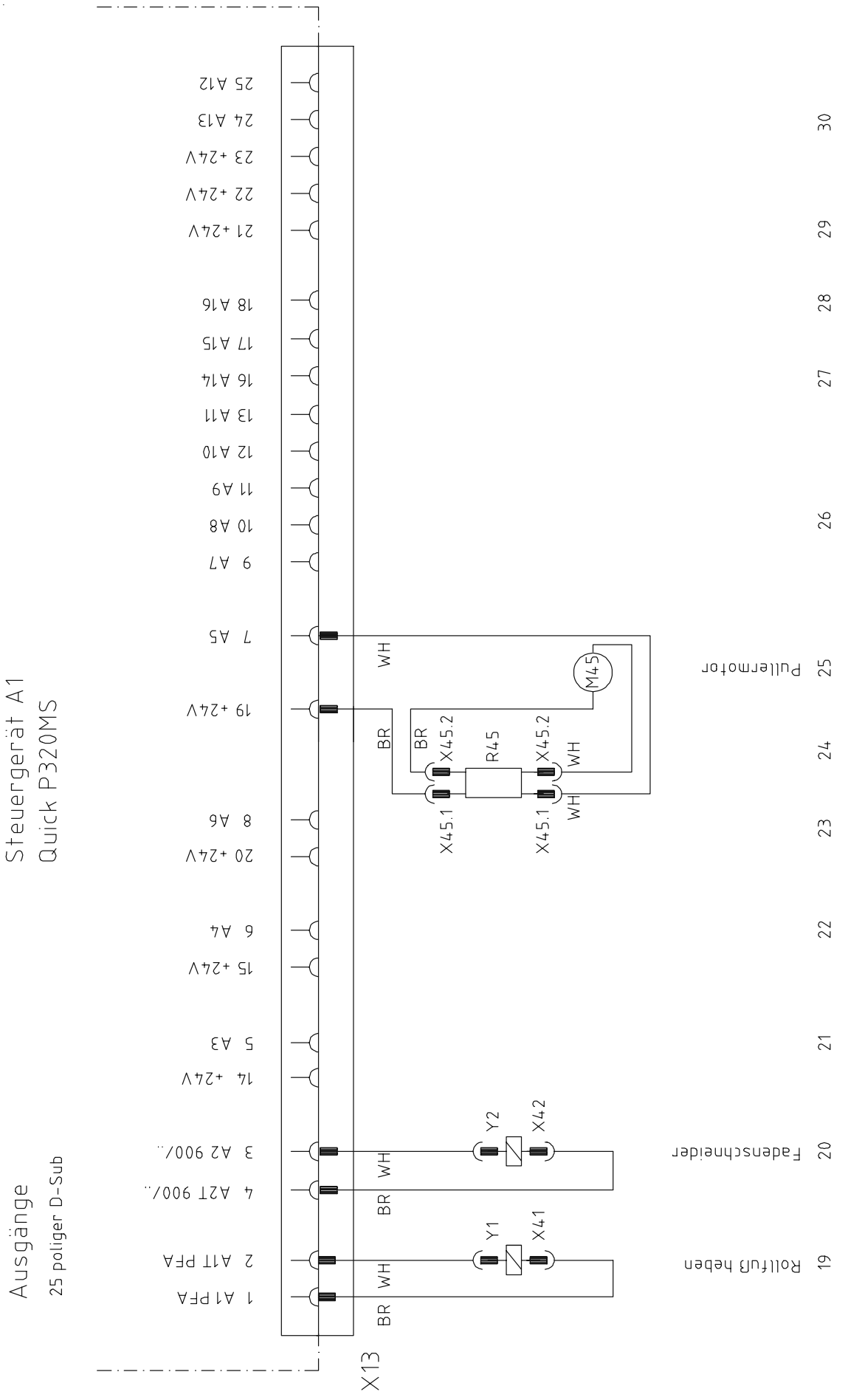
Steuergerät A1
Quick P320MS
Ausgänge
25 poliger D-Sub
25 A12
24 A13
23 +24V
22 +24V
21 +24V
18 A16
17 A15
16 A14
13 A11
12 A10
11 A9
10 A8
9 A7
7 A5
19 +24V
8 A6
20 +24V
6 A4
15 +24V
5 A3
14 +24V
3 A2 900/..
4 A2T 900/..
2 A1T PFA
1 A1 PFA
X13
WH
BR
M45
R45
X45.2
X45.1
Y1
Y2
X41
X42
Pullermotor
Fadenschneider
Rollfuß heben
19
20
21
22
23
24
25
26
27
28
29
30

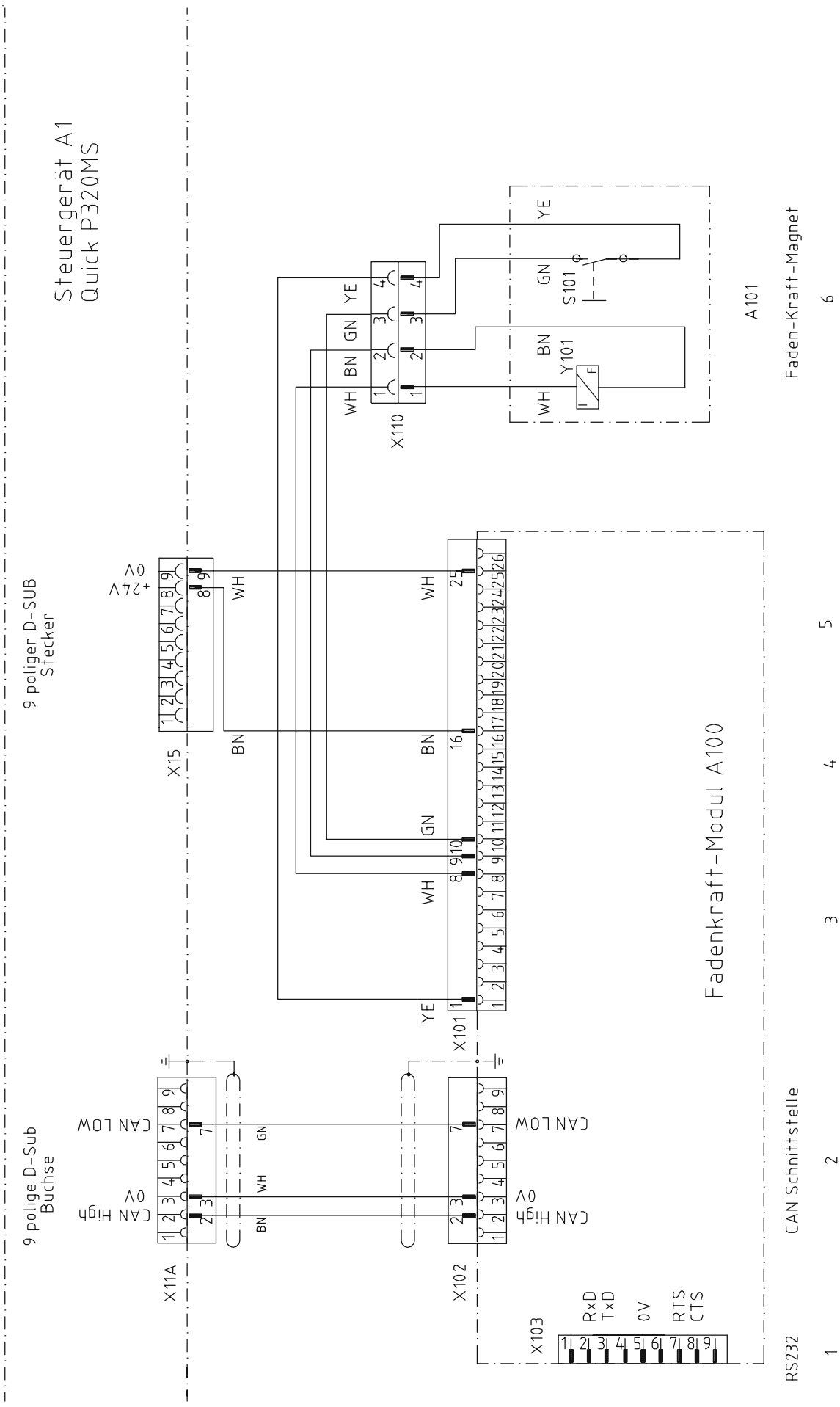
Steuergerät A1
Quick P320MS
9 poliger D-SUB
Stecker
9 polige D-Sub
Buchse
Fadenkraft-Modul A100
Faden-Kraft-Magnet
A101
S101
Y101
X15
X11A
X101
X102
X103
X110
+24V
0V
CAN LOW
CAN High
RxD
TxD
0V
RTS
CTS
RS232
CAN Schnittstelle
WH
BN
GN
YE
1
2
3
4
5
6

PFAFF

PFAFF Industrie Maschinen AG

Postfach 3020
D-67653 Kaiserslautern

Königstr. 154
D-67655 Kaiserslautern

Telefon: (0631) 200-0
Telefax: (0631) 17202
E-Mail: info@pfaff-industrial.com

Gedruckt in der BRD
Printed in Germany
Imprimé en R.F.A.
Impreso en la R.F.A.